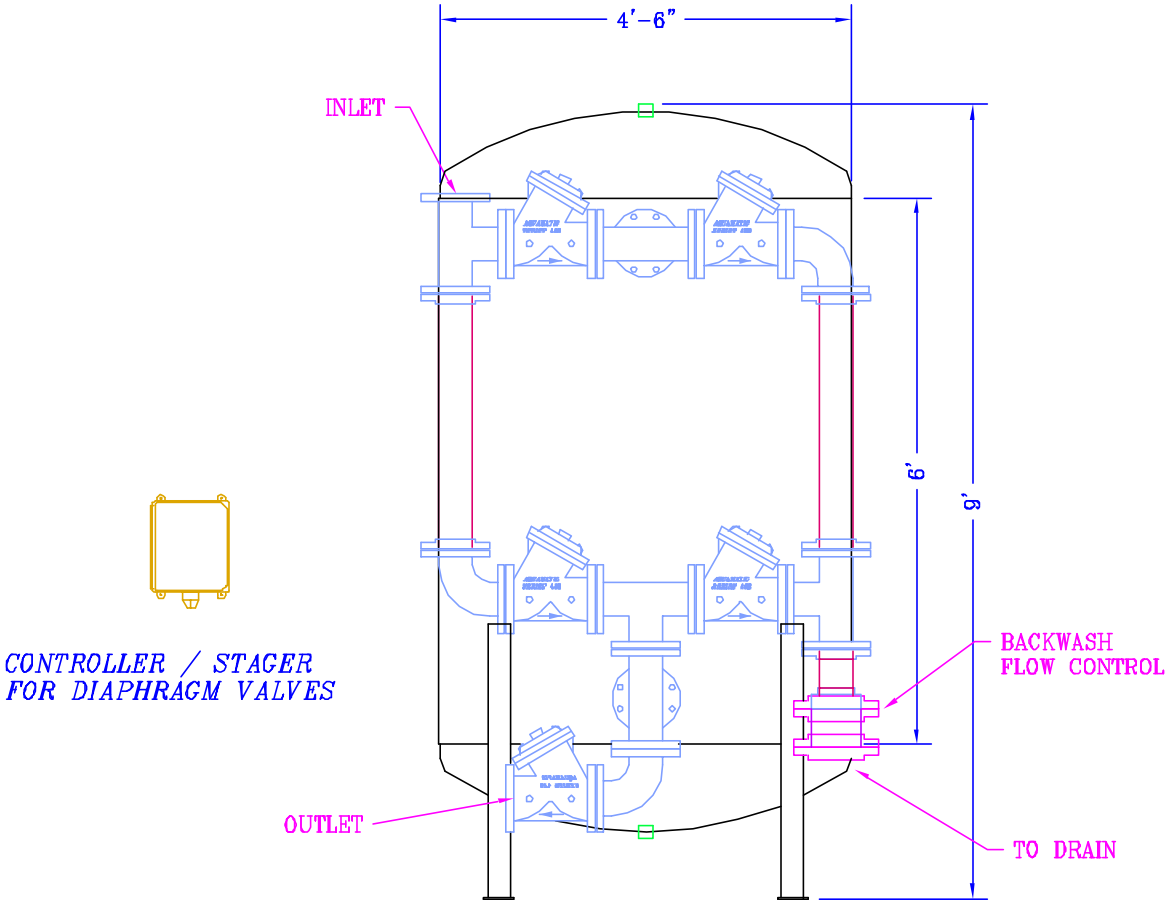

BY:	No.	REVISION	DATE	CK'D
	0	PRELIMINARY	10/6/99	.
	1	.	-	
		PLOTTED / PRINTED: 00/00/99		

Water King
WATER CONDITIONING
Water King, Inc.
103 Charbonnet Rd., Duson, Louisiana, U.S.A. 70529
Telephone: (337) 988-2360 • Fax: (337) 981-7922
www.waterking.com

FHF-1650-4" FILTER
TYPICAL PIPING ARRANGEMENT

DR. BY R.RICHARDSON	ENG.: .	DRY WEIGHT
CH. BY	FILE: C:\CATALOG\WKFHF1650.dwg	OPERATING WT.
DATE 10/06/99	DRAWING NUMBER WKFHF1650	SHEET 1 / 1
SCALE 0024"x36" NONE		