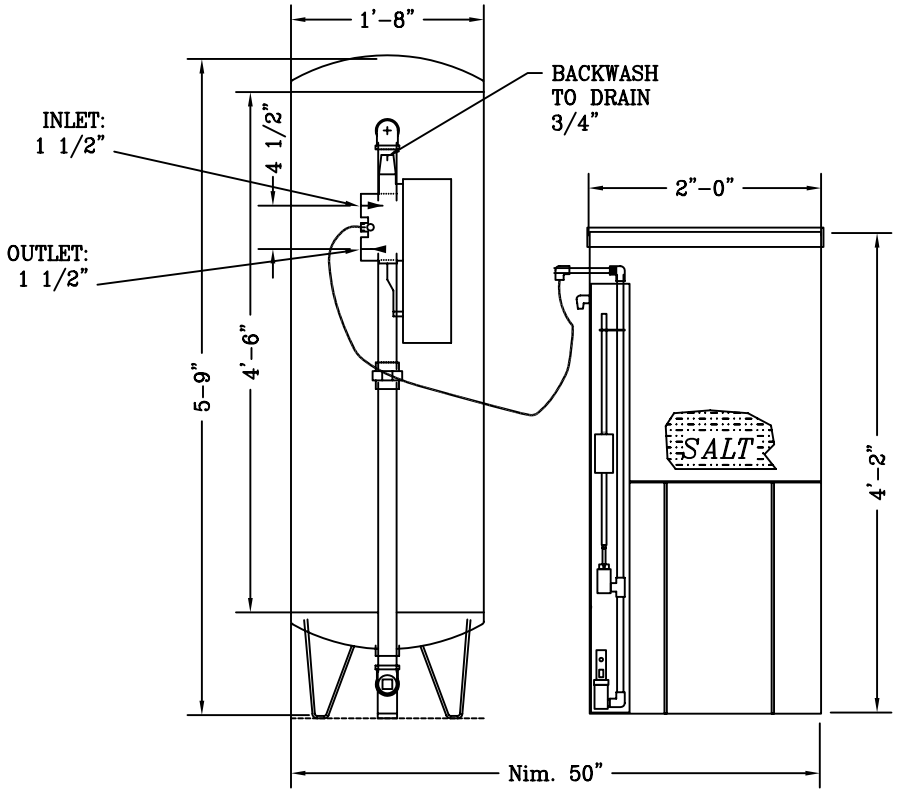

Note: #'s MF150,180 have same dimensions.

BY:	No.	REVISION	DATE	CK'D
	0	PRELIMINARY	8/17/99	.
	1	.	.	
		PLOTTED / PRINTED: 00/00/99		

Water King
WATER CONDITIONING
Water King, Inc.
102 Charbonnet Rd., Duson, Louisiana, U.S.A. 70529
Telephone: (337) 988-2360 * Fax: (337) 981-7922
www.waterking.com

WATER KING MF-150-1 1/2 SOFTENER
TYPICAL ARRANGEMENT

DR. BY R.RICHARDSON	ENG.: .	DRY WEIGHT
CH. BY	FILE: C:\CATALOG\WKMF150.dwg	OPERATING WT.
DATE 8/17/99	DRAWING NUMBER WKMF150	SHEET 1 / 1
SCALE @24"x36" NONE		

C:\CATALOG\wkmf150.dwg, 5/4/2006 9:05:41 AM, Letter,
1:19.923, Water King Inc