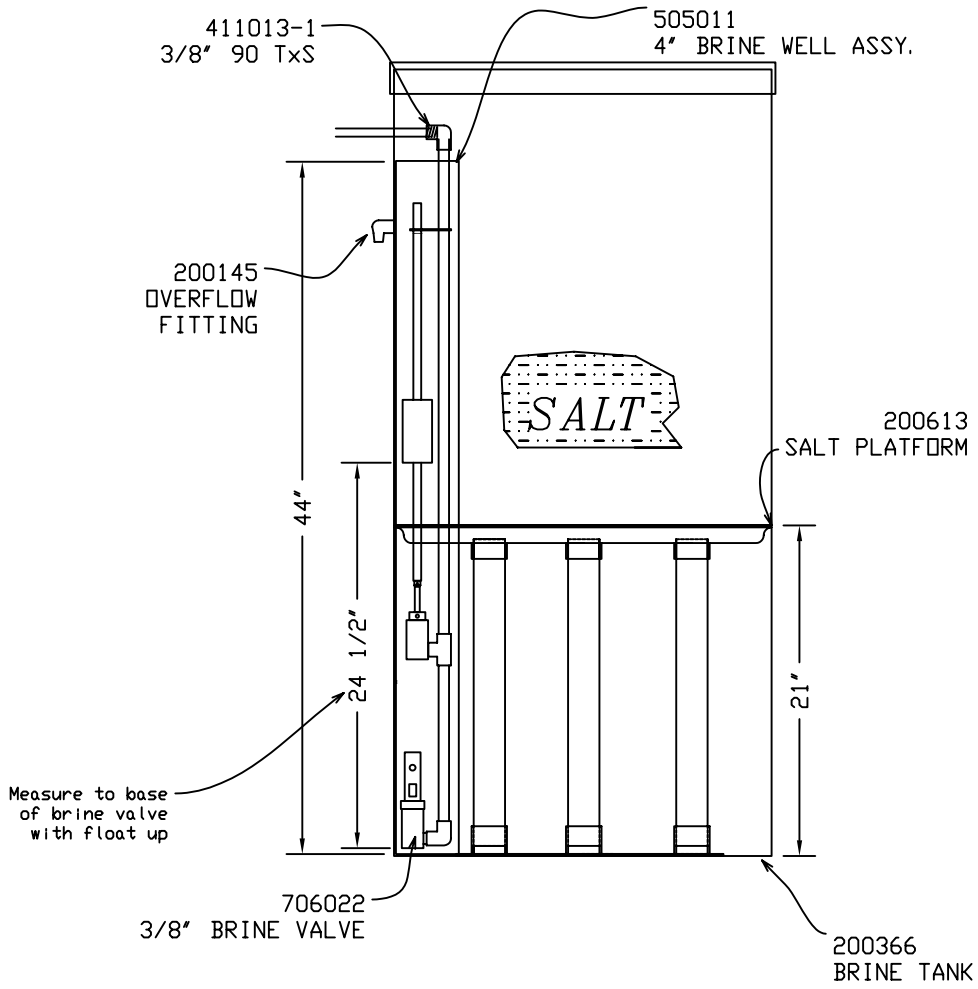

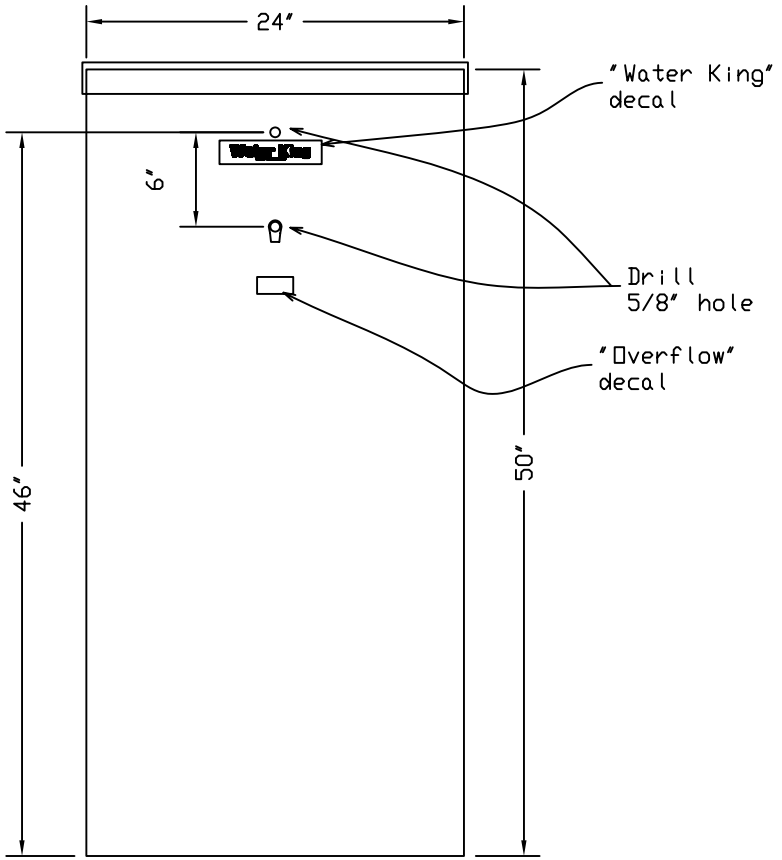

RELATED PARTS:
200126-2 BRINE LINE ASSY.
200442-2 BRINE DIRECTOR ASSY.
200441-2 BRINE DIST. ASSY.

SALT DRAW: 106 Lbs.
SALT STORAGE: 580 Lbs.
UNITS SHIPPED WITH:
180, 240, 300

BY:	No.	REVISION	DATE	CK'D
	0	PRELIMINARY	4/28/2008	HM
	1	UPDATE SALT PLATFORM	8/14/08	.
		PLOTTED / PRINTED: 2/18/2010		

Water King
WATER CONDITIONING
Water King, Inc.
102 Charbonnet Rd., Duson, Louisiana, U.S.A. 70529
Telephone: (337) 988-2360 * Fax: (337) 981-7922
www.waterking.com

24" x 50" BRINE TANK ASSEMBLY

DR. BY R. RICHARDSON	ENG.: ..	DRY WEIGHT
CH. BY H. MEMBRENO	FILE: C:\CATALOG\805077	OPERATING WT.
DATE 04/29/2008	DRAWING NUMBER 805077	SHEET 1 / 1
SCALE N.T.S.		