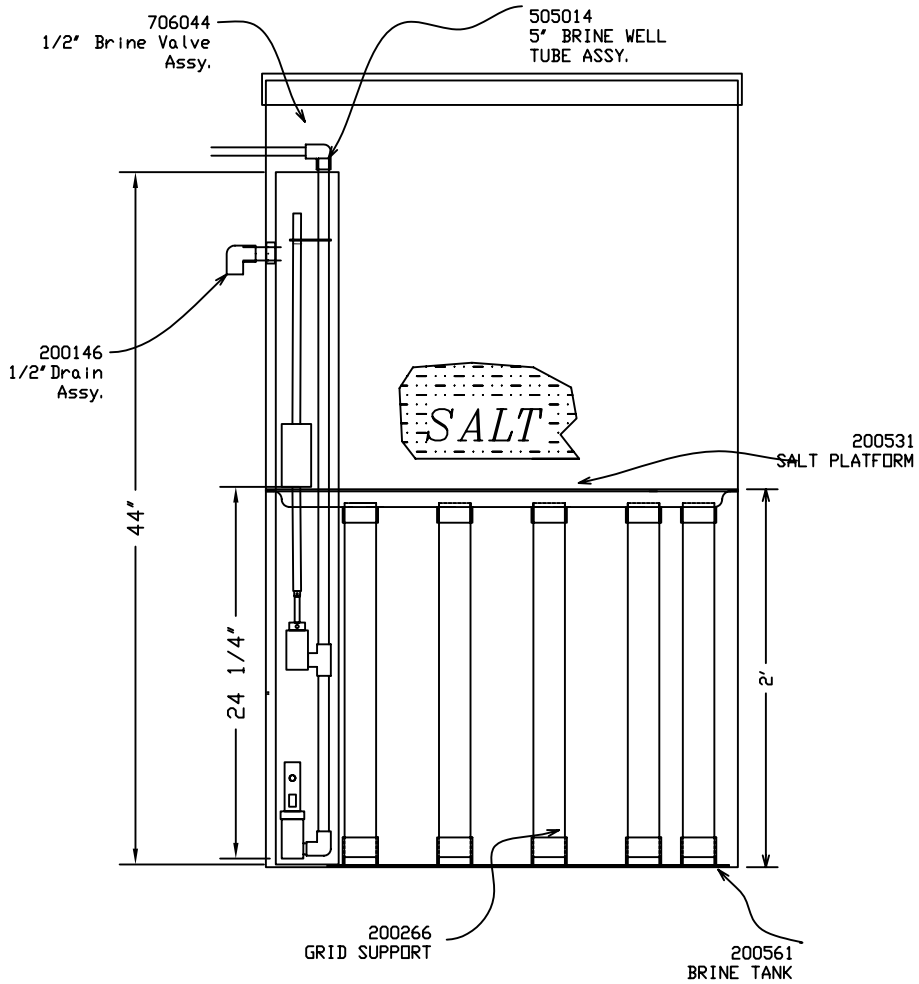

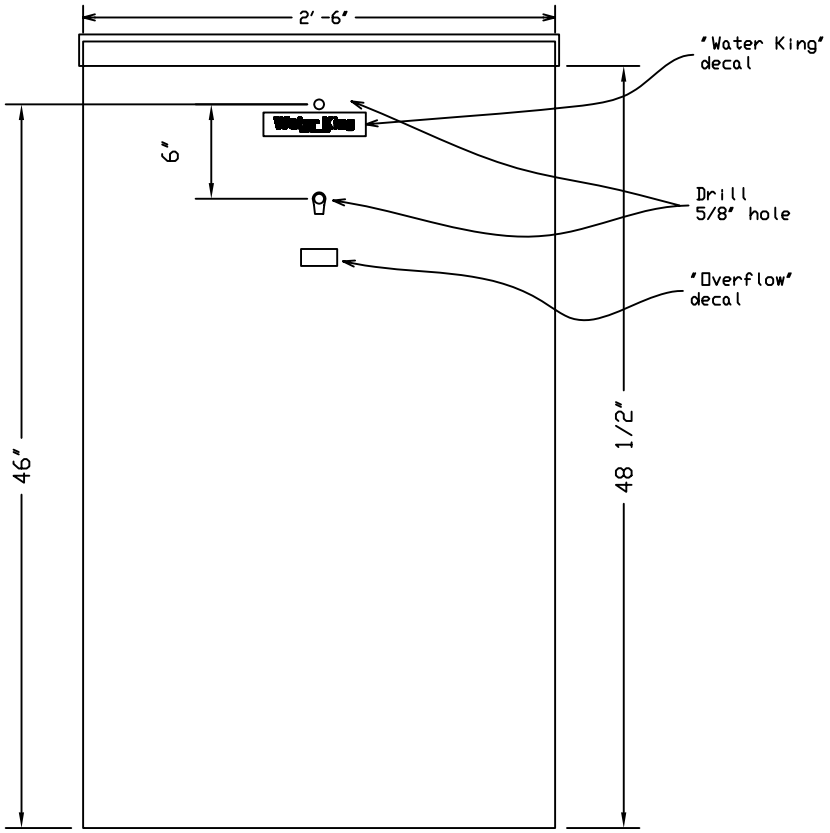

SALT DRAW: 145 Lbs.
SALT STORAGE: 900 Lbs.
UNITS SHIPPED WITH:
450

RELATED PARTS:
200126-3 BRINE LINE ASSY.
200442-3 BRINE DIRECTOR ASSY.
200441-3 BRINE DIST. ASSY.

BY:	No.	REVISION	DATE	CK'D
	0	PRELIMINARY	4/28/2008	HM
	1	UPDATE SALT PLATFORM	8/14/08	.
		PLOTTED / PRINTED: *2/18/2010*		

Water King
WATER CONDITIONING

Water King, Inc.
102 Charbonnet Rd., Duson, Louisiana, U.S.A. 70529
Telephone: (337) 988-2360 * Fax: (337) 981-7922
www.waterking.com

30" x 50" BRINE TANK ASSEMBLY

DR. BY R. RICHARDSON	ENG.: ..	DRY WEIGHT
CH. BY H. MEMBRENO	FILE: C:\CATALOG\805177	OPERATING WT.
DATE 04/29/2008	DRAWING NUMBER 805177	SHEET 1 / 1
SCALE N.T.S.		