Parts Lists
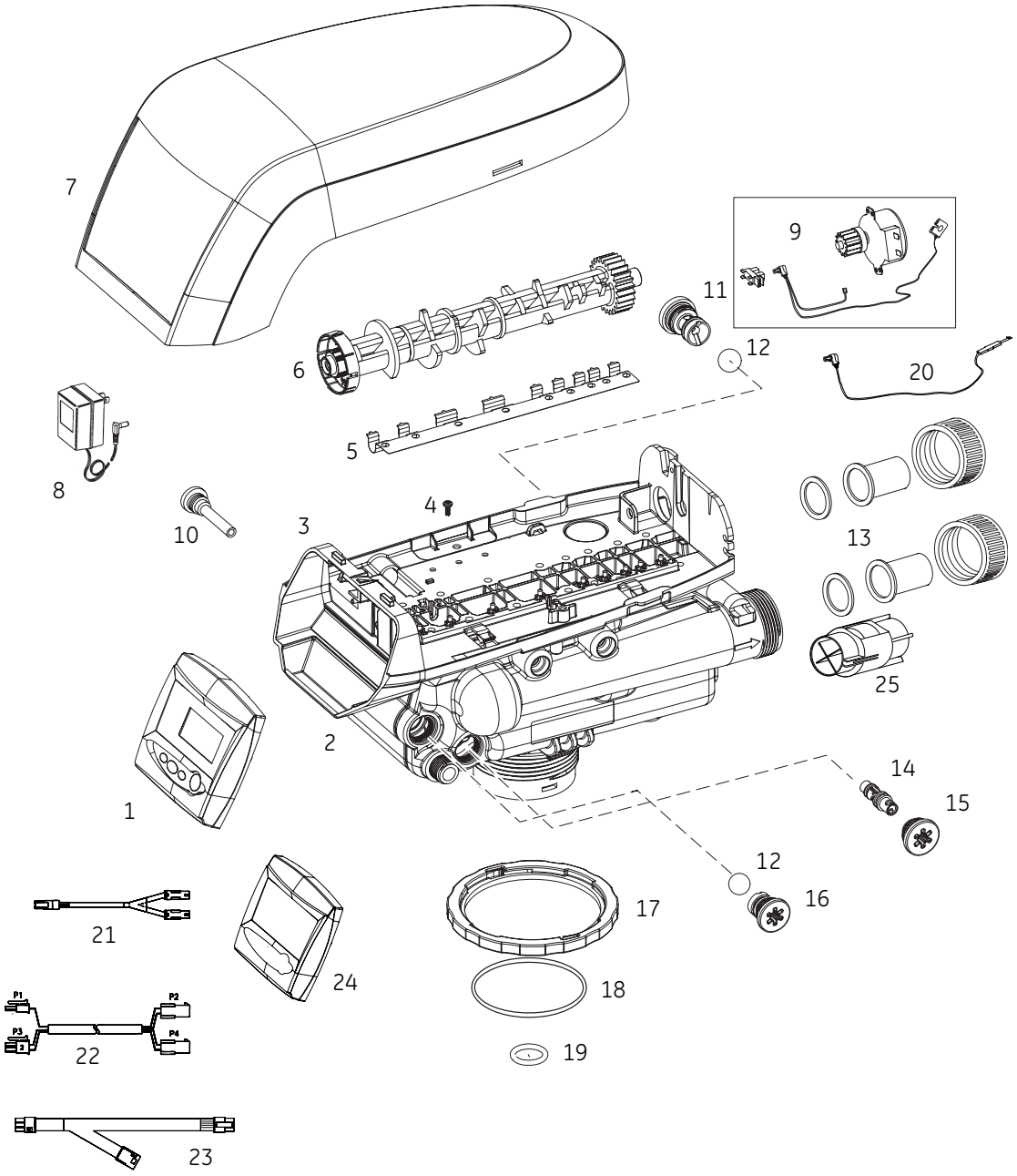
273/278 Exploded View & Parts List