Bill of Materials List
by Location ID

Inventory ID	Description	Loc ID		Quantity	Unit
953242-11	MF FG-240-3" TA	1			
	MF FG SERIES WATER SOFTENER				
	DEMAND REGENERATION				
	SIDE MOUNT TASK MASTER III VALVE				
	FIBERGLASS VESSEL				
	ACCUMATIC BRINE SYSTEM				
100187-3	24x72 COMP MINERAL TANK, 6FTB, TRIP	1	Item	2.0000	EA
	CONNECTION: 6" FLANGE TOP & BOTTOM				
	COLOR: BLUE				
	BASE: TRIPOD				
100343-5	UPPR DIST ASSY 18-48", 6" SNAFG 1PT	1	Item	2.0000	EA
	18-48" DIA FG VESSEL				
	SINGLE PT				
	ADAPTOR FOR 6" SNA FLANGE				
	3" FNPT CONNECTION				
500001-24	24" H&L 6"BFx3"FNPT	1	Item	2.0000	EA
	18"-21" DIA FG VESSEL				
	SINGLE POINT SLOTTED DISTRIBUTOR				
	ADAPTOR FOR 6" BOTTOM FLANGE				
	3" FNPT CONNECTION				
809620-FG	FACE PIPE MF FG 3F SUPER 30 TANK	1	Sub	2.0000	EA
	18 TO 48" DIA FG VESSELS				
	3" GALV GROOVED PIPING				
	3" PVC80 TANK CONNECTIONS				
100074	1-1/2" MNPT PVC-80 VACUUM BREAKER	1	Item	2.0000	EA
	VACUUM BREAKER				
	REQUIRED FOR FIBERGLASS				
	PRESSURE VESSELS				
200109	1" DRAIN ASSY FOR 3" GRV FACE PIPE	1	Sub	2.0000	EA
479907	RESIN PK 240 24X72 F 8 , 2	1	Sub	2.0000	EA
	8 FT3 8% CATION RESIN				
	2 FT3 GRAVEL				
	FOR 24X72 FG VESSEL				
	WATER KING MODEL 240				
707150-5CYNS	TM3 ERCd GLD 15 / 0.75 N AM SIDE	1	Sub	1.0000	EA
	TASK MASTER III				
	316 STAINLESS STEEL				
	5 CYCLE WATER SOFTENER VALVE				
	PRIMARY - ERCd CONTROLLER				
	GOLD EDUCTOR				
	15 GPM BACKWASH 3/4" NPT				
	SIDE MOUNT				
	110V 60 HZ				
	USA PROGRAM				
707150-6CYNS	TM3 SEC GLD 15 / 0.75 N AM SIDE	1	Sub	1.0000	EA
	TASK MASTER III				
	316 STAINLESS STEEL				
	5 CYCLE WATER SOFTENER VALVE				

Inventory ID	Description	Loc ID		Quantity	Unit
	SECONDARY - NO CONTROLLER				
	GOLD EDUCTOR				
	15 GPM BACKWASH 3/4" NPT				
	SIDE MOUNT				
	110V 60 HZ USA				
500843	PW300 3" FLOW METER ASSEMBLY (ERCd)	1	Sub	1.0000	EA
	PADDLE WHEEL FLOW METER				
	3" FNPT CONNECTIONS				
	CAST 316 STAINLESS STEEL BODY				
	NORYL PLASTIC PADDLE WHEEL				
	HALL EFFECT METER				
	CONNECTOR FOR ERCd CONTROLLER				
720033	3" GRV SUPERFLOW KIT w/ IE	1	Sub	2.0000	EA
	3" GROOVE DIAPHRAGM VALVES				
	INLET OUTLET				
	TUBING				
	SOLENOID				
	CONDUIT AND WIRE				
	FOR INTERNAL EDUCTOR				
805077	24X50 BRINE TANK ASSY BM/21SP	1	Sub	1.0000	EA
	ACCUMATIC BRINE TANK ASSEMBLY				
	DIAMETER: 24 INCHES				
	HEIGHT: 50 INCHES				
	BLOW MOLDED HDPE TANK				
	3/8" BRINE VALVE				
	21" HIGH SALT PLATFORM				
200442-2	BRINE DIRECTOR ASSY 3/8" BV 1/2" BL	1	Sub	1.0000	EA
	KIT CONSISTING OF:				
	3/4" BRINE DIRECTOR				
	1/2" POLY PRO BRINE LINE				
	FITTINGS FOR TM3 AND				
	3/8" BRINE VALVE				
RACK2	PIPE RACK MFFG 2" IE	1	Sub	2.0000	EA
	GALV UNISTRUT PIPE RACK				
	FOR MF FG SUPERFLOW				
	INCLUDES STRUT, ANGLES,				
	CLAMPS, AND FASTENERS				
	ANCHOR BOLTS NOT INCLUDED				
400904	4" FUNNEL	1	Item	1.0000	EA

End of Report

Water King

Water Softener Performance		
Part No.:	**953242 -11**	
MF FG	**240**	**TA**
Capacity Per Vessel:	245,000	grains at preset brine draw
System Capacity:	490,000	grains
Brine Tank Salt Storage:	640	lbs as NaCl
Preset Brine Draw:	91	lbs per regeneration
Salt Dosage:	11	lb salt / ft3 of resin
Backwash Rate:	15	gpm
Flow vs Headloss (1)		
Head Loss	Flow	
5 psi	69	gpm
10 psi	115	gpm
15 psi	**154**	**gpm - Continuous Flow**
20 psi	189	gpm
25 psi	**220**	**gpm - Peak Flow**

(1) Head losses include minor losses from the inlet and outlet diaphragm valves comprising the super flow kit (SFK) plus losses from the media, piping and distributors.

Twin Alternating (-TA). Twin alternating units operate so that once a predetermined amount of water has passed through the flow meter the ERCd initiates regeneration of the exhausted unit placing its twin in service. One unit is on line and one is either in standby or service. The ERCd demand initiated regeneration controller controls the regeneration cycles for both of the twin alternating units. TA systems shall have two mineral tanks, two Task Master III control valves (a primary and a secondary), one brine tank with brine director, one ERCd controller, one PW, PWS or TM series flow meter and two shut off kits. The ERCd shall provide regeneration initiation and meter display.

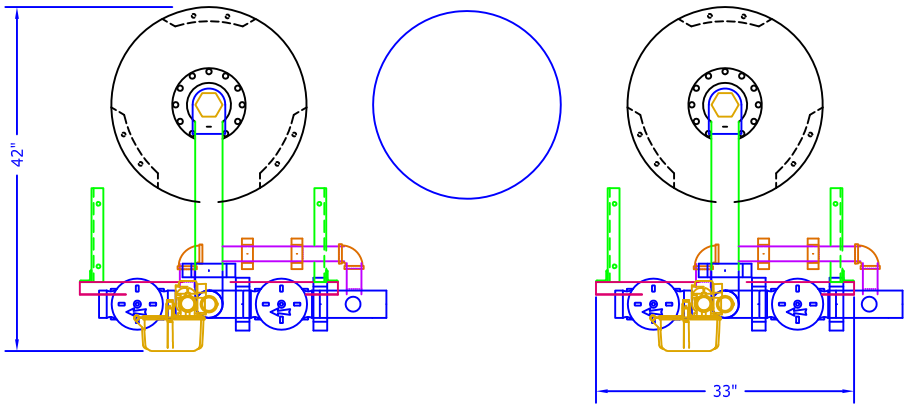

TOP VIEW

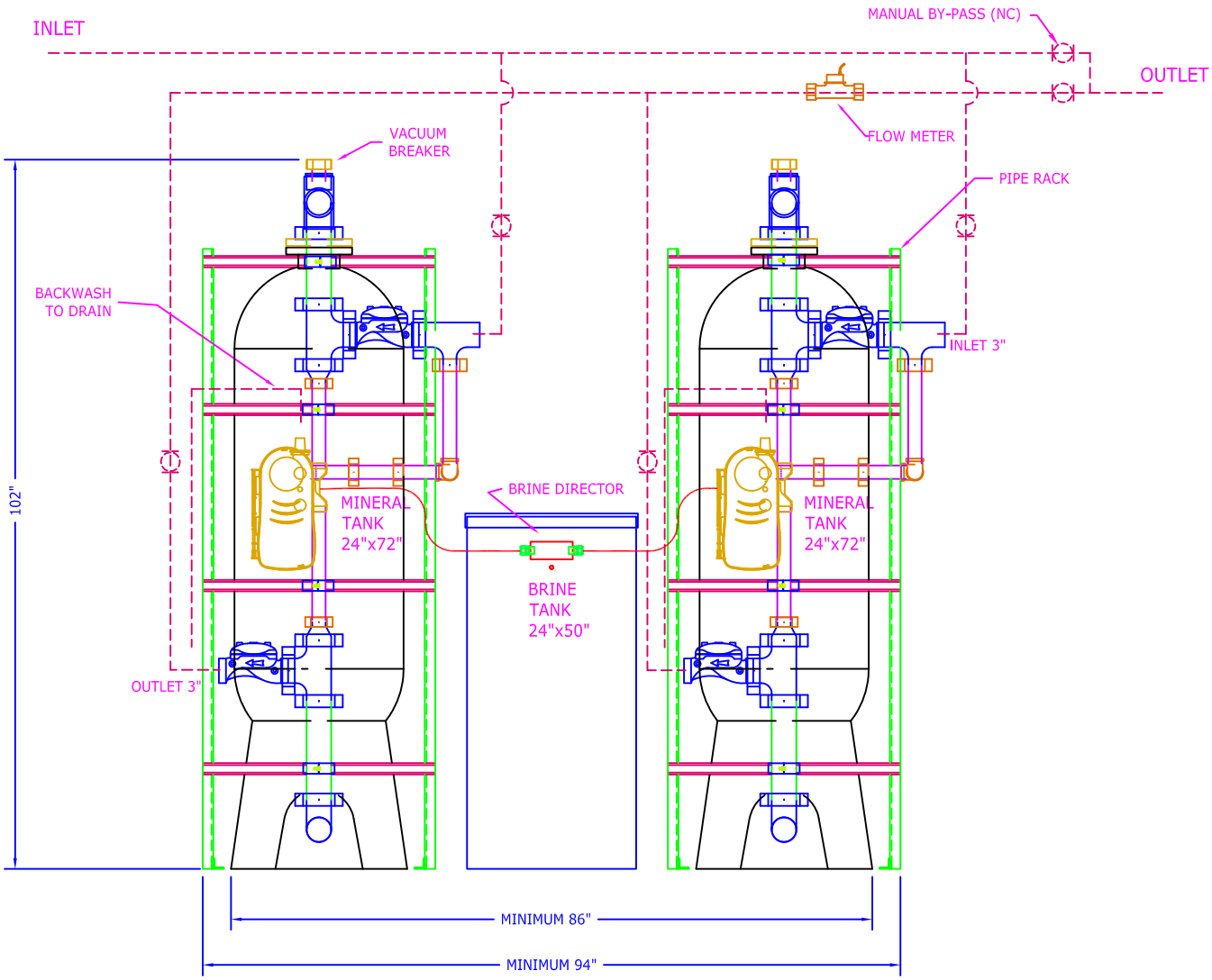

ELEVATION

NOTES:
1) PIPING SHOWN IN DASHED LINES TO BE SUPPLIED BY CUSTOMER.
2) ALLOW 1 FOOT ABOVE TANKS FOR LOADING.
3) FLOW METER REQUIRES (15) PIPE DIAMETER LENGTHS BEFORE METER & (10) AFTER FOR PROPER OPERATION.
4) FLOW METER SHOULD BE MOUNTED HORIZONTALLY.

SHIPPING WEIGHT	3000 Lbs.
OPERATING WEIGHT	7450 Lbs

BY:	No.	REVISION	DATE	CK'D
RLR	0	SUBMITTAL FOR APPROVAL	01/05/2015	JEB

Water King

953243-11
MF-FG-240S-3 TWIN ALTERNATING
GENERAL ARRANGEMENT

SCALE	DRAWING NUMBER	SHEET
N.T.S.	MF-FG-240-3T	01 / 01

102 Charbonnet Rd., Duson, Louisiana, 70529, U.S.A.
Telephone: (337) 988-2360 * Fax: (337) 981-7922
www.waterking.com

J:\Drawings\catalog\MF\MF-FG-240-3T.dwg, 1/5/2015 11:31:23 AM, Adobe PDF, Letter, 1:24.548, WATER KING Inc>

Water King

Specification (MF FG Twin Alternating or Parallel with 3" piping)

The MF FG series shall consist of fiberglass composite mineral tanks with schedule 80 pvc internals, grooved galvanized face piping, 8% cross link cation resin, a poly propylene brine tank with a float operated pvc brine valve, a Task Master III five cycle stainless steel water softener valve, 3" cast iron inlet and outlet diaphragm valves and a 3" paddle wheel flow meter.

Mineral Tank. The mineral tank shall be "polyglass" consisting of an inner shell of virgin polyethylene and an external shell of continuous fiberglass roving. Tanks shall be rated at 100 psi operating pressure, 120°F operating temperature with 6" flanged top and bottom opening. Vessels shall have tripod style legs and shall be either blue or natural color.

ASME code fiberglass vessels are optional.

Upper Distributor. The upper distributor shall be a single point, high flow 3" slotted style distributor.

Lower Distributor. The bottom distributor for vessels 24" diameter and smaller shall be a single point 3" slotted distributor. The bottom distributor for vessels 30" and larger shall be a 3" hub and lateral.

Face Piping. The softener(s) shall ship with face piping and support rack on a pallet separate from the vessels. The rack mounted piping shall be attached to the tank inlet and outlet via two grooved flex couplings. The flex couplings allow for tank expansion. Face piping shall be schedule 40 galvanized carbon steel with NPT fittings for 1 ½" and 2" piping. Piping for super flow or service flow bypass shall be schedule 40 grooved fitting galvanized carbon steel. A 1 ½" vacuum relief valve shall be installed in the piping at the top of each vessel

Face Piping - PVC80. Alternate piping in Schedule 80 Poly vinyl chloride shall be indicated by -PVC 80 on the part number or model number. The configuration shall be the same as listed in the previous paragraph except the piping shall be solvent welded Sch 80 PVC.

Media. The resin shall be sodium form polystyrene 8% divinyl benzene cross linked resin with clear spherical beads. Resin beads shall be 16-50 US Standard Mesh with a particle size range of 0.3 to 1.2 mm. The resin shall be clean and packaged in sealed plastic bags weighing 55 lbs or less. Underbedding shall be #20 graded washed flint gravel sieved between 1/8" and 1/16".

Brine Tank. The brine system shall be of the Accumatic™ high grid plate design. The brine tank shall be blow molded or rotationally molded HDPE, including a cover. The system shall include a SCH 80 PVC float operated brine valve to control refill shut-off and refill flow rate. Brine volume is to be repeatedly accurate within 10% and not dependent on salt bed void space for brine volume. Brine draw is to volumetrically controlled, not timed.

Brine Line Assembly. Brine shall flow through the brine valve to the mineral tank via a brine tubing assembly. The tubing shall be Polyethylene with Liquid-Tite Tube x NPT connectors. The brine inlet fitting to the Task Master III valve is ½" MNPT and the connection to the brine valve shall match the valve.

Control Valve Specifications. The main control valve(s) shall be the Task Master III™ with electronic controller to actuate the cycles of backwash, brine, slow rinse, fast rinse, and service for a water softener (or backwash, rinse and service for a filter). The control valve(s) shall be Task Master III™

5-Cycle, multi-port control valve(s) with machined passivated CF8M Type 316 Stainless Steel body, Type 316 Stainless Steel piston assembly, and EPDM (NSF61 and WRAS Approved) inserts and seals with electronic controller and drive motor assembly in a NEMA 4/IP65 Style Enclosure. The valve shall operate with a single motor driven piston positioned by optical sensors. Valve inlet and outlet shall be 1 ½” FNPT. Backwash drain shall be ¾” or 1 ½” depending on flow. The brine inlet shall be ½”. The one piece brine eductor shall be installed in the valve. The valve shall be equipped with threaded ¼” FNPT ports for the installation of sample taps and pressure gauges. (Taps and gauges are optional.) Hard water by-pass shall be available during all regeneration cycles at 70 gpm or at the peak flow rate of the unit, at a pressure drop less than 25 psi, whichever is less. No hard water bypass option is obtained by adding a shut off kit to the valve. The valve shall be of a single piston design and shall not use multiple plungers or diaphragm valves. Maximum rated power shall be 125 watts with available current options of 115 VAC, 230 VAC, 100 VAC, 200 VAC, in 50 or 60 Hertz. Ambient operating temperature range shall be 34° F (1° C) to 150° F (65° C). Fluid temperature range shall be 34° F (1° C) to 180° F (82° C). Operating pressure range shall be 20-125 psi (1.38 - 8.6 bar).

PW Series Flow Meter Assembly. The flow meter shall be a PW series brass body, paddle wheel flow meter. The electronics shall be isolated from contact with the water. The flow meters shall have cast and machined brass housings with female NPT connections. The paddle wheel assembly shall be corrosion-proof with a stainless steel shaft. Meters shall be serviceable without removing from plumbing. The flow meter shall have a plug and play type connector for the ERCd controller. The PW series meters have a paddle wheel with a magnet mounted in the wheel. Every time the paddle wheel rotates, a pulse of electrical current is generated. This is called the Hall Effect. Flow is registered on the ERCd by counting the pulses.

Super Flow Kit. A Super Flow Kit (SFK) shall consist of an inlet and an outlet diaphragm valve operated by a solenoid, which opens the valves when the unit is in service and closes the valves when the unit is in regeneration or standby. For the 2”, 3”, 4” and 6” SFKs the valves shall be DM300B, DM400B, or DM600B grooved end, polyester coated and lined, 235 psi cast iron diaphragm valves.

Funnel. A 4 inch polyethylene funnel is provided to aid in loading the media.

System Operating Conditions. Maximum temperature shall be 100° F. Maximum Pressure shall be 100 psi. The pressure rating can be increased to 125 psi by specifying 125 psi vessels. The temperature rating can be raised to 180° F by specifying Viton seals for the shut off kits (-V), high temperature epoxy (placite) for the vessels, and 10% cross-linked resin.

Other items. A standard soft water soap test kit shall be provided. A complete set of instructions, including installation, loading, start-up, adjustments, servicing, and a parts list shall be provided with the equipment.

Qualifications. A company that has continuously manufactured water softeners for at least twenty (20) years shall construct this equipment.

Pressure gauge and test tap kit. A kit containing two liquid filled, stainless steel pressure gauges with 2 ½” Ø face, two brass ball valve sample taps with hose barb connections and associated brass connection fittings shall be provided for mounting in the 1/4″ FNPT predrilled and tapped ports in the inlet and outlet of the Task Master III valve.

Fiberglass Composite Mineral Vessels

FIBERGLASS COMPOSITE TANKS

FOR MF FG 3" SUPER FLOW SYSTEMS

Water King MF-FG Series systems use fiberglass composite vessels with a fiberglass exterior and polyethylene liner.

SPECIFICATIONS

Standard Vessels. Composite tanks shall be 100% non-metallic construction, seamless, molded vessels with no welds or joints. The inner shell shall be constructed of polyethylene and the outside shall be wound with continuous fiberglass, roving to provide superior strength under pressures up to 150 psi. All tanks, vessels, and the materials used in their construction shall be accepted or certified by the Water Quality Association and ANSI/NSF Standard 44. Working pressure rating shall be 100 psi with a design factor of safety of at least 4:1. The tanks have a circular plastic base. Water King's fiberglass composite tanks are covered by a 5-year warranty. Standard color shall be blue or natural.

Note on temperature ratings. Composite polyester tanks with polyethylene lining with threaded fittings shall be rated at 120°F. Composite tanks with flanged fittings shall be rated at 150°F. Vinyl ester FRP tanks, without liners, with threads shall be rated at 150°F.

Commercial Application. The Task Master III valve is side mounted and the face piping is rack mounted to eliminate piping loads on the vessels.

Internals. The composite vessels on the MF FG 3" systems have 6" SNA flanges on the top and bottom. The upper and lower distributors are non-metallic slotted distributors mounted to adaptors to a 3" Female NPT. Lower distributors on 30" diameter and larger vessels are hub and lateral. For 24" diameter and smaller vessels the lower distributor is single point.

Upper Distributor:

3" Male NPT Schedule 40 PVC Slotted Distributor
6" SNA Flange x 3" FNPT Adaptor

3" FNPT Threaded Bottom Mount Hub and Laterals

Eight threaded polypropylene large laterals with .008 slot, polypropylene hub.
(6" Flange x 3" FNPT x 3" FNPT Adapter Included)

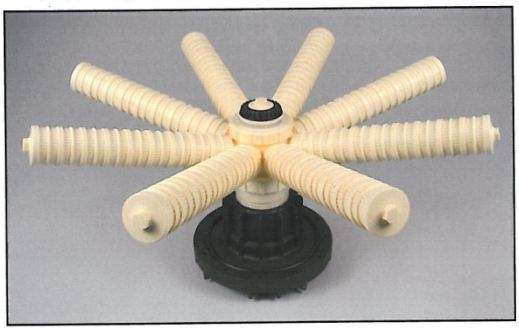

CAT282D.2

MINERAL TANKS FOR MF FG SERIES 3"SUPER FLOW SYSTEMS					
Vessel Size Dia x Ht	24x72	30x72	36x72	42x72	48x72
Part No	100187-3	100190-3	100189-3	100191-3	100192
A	24.2	30.2	36.1	42.25	48.25
B	88.5	88.9	90.4	90.12	92.9
C	14.0	14.0	14.2	17.12	16
D	74.5	74.9	76.2	73.0	76.9
E	25.2	31.5	39.0	44.6	50.8
F (1)	54.5	52.7	48.7	43.7	43.9
Tank Volume (gallons)	119	187	264	345	463
Dome Volume (gallons)	9.3	18	33	52	74
Weight (pounds)	137	211	285	400	494
Max Resin at 50% Bed Expansion (2)	9.7	14.6	19.2	23.6	31
Max Resin at 40% Bed Expansion (3)	10.4	15.6	20.6	25.3	33.2
All MF FG 3" Super Flow vessels have 6" – SNA Flanged Connections at Top and Bottom with a tripod base.					
(1) Calculated value of straight side shell (total volume less domes) plus 4".					
(2) Max Resin Volume = F x .785 x A^2 / 1.5 (convert to ft3)					
(3) Max Resin Volume = F x .785 x A^2 / 1.4 (convert to ft3)					

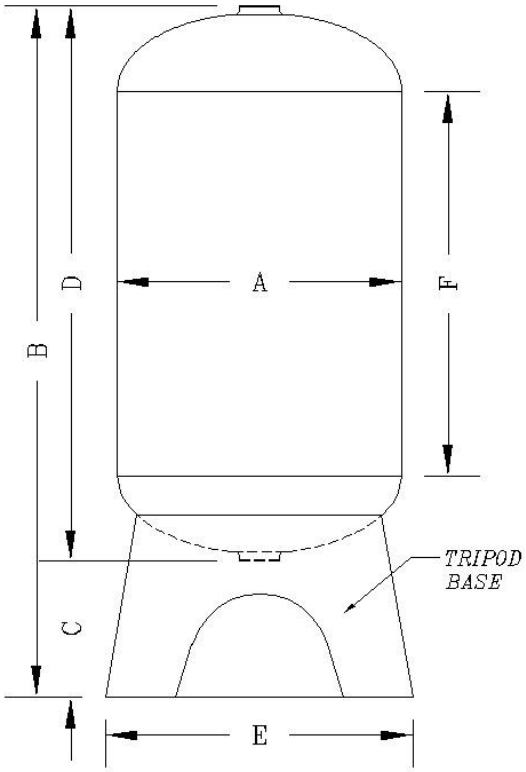

102 Charbonnet Road ♦ Duson, Louisiana 70529 ♦ 337 988 2360 ♦ Fax 337 981 7922
wkinfo@waterking.com ♦ Revised 12/24/14

VACUUM BREAKER

The face piping for the MF, MF FG, and VN series water softeners and filters includes a 1 ½" MNPT vacuum breaker. This limits the potential for damage to the fiberglass vessel is a vacuum is drawn on the vessel.

Part Number 100074

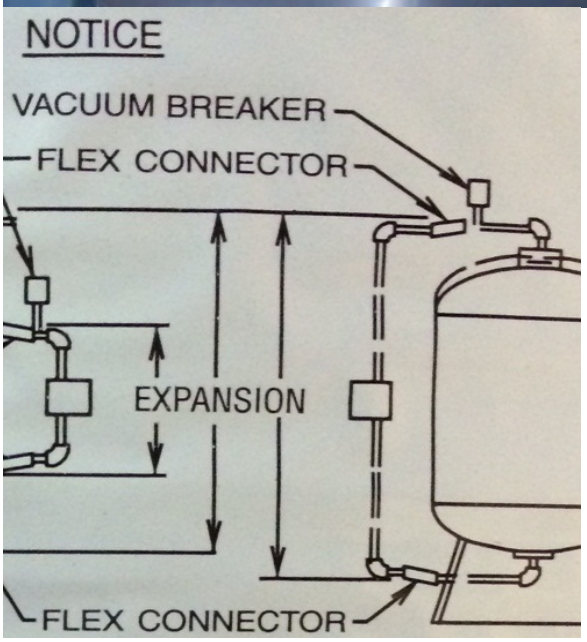

🡸

Diagram is taken from Pentair tank label. Note that vacuum breaker is required with position indicated in the drawing.

Warning from Pentair tank label:
Tank is rated for an internal negative pressure of 5" Hg vacuum below atmospheric. If negative pressure exceeds 5" Hg negative pressure, and adequate vacuum breaker must be installed between the tank inlet/outlet and any valves. Failure to install vacuum breaker will void product (tank) warranty.

BOTTOM DRAIN

The face piping for the MF, MF FG, and VN series water softeners and filters includes a bottom drain assembly. This allows the mineral tank to be drained through a single ball valve.

Part No	Description
200108	1” Drain Assembly for 2” Grooved Face Piping (Galvanized)
200109	1” Drain Assembly for 3” Grooved Face Piping (Galvanized)
200210	1” Drain Assembly for 2” Sch 80 PVC Face Piping
200211	1” Drain Assembly for 2” Sch 80 PVC Face Piping

WK 100 Softener Resin

WK100 IS A MULTIPURPOSE, PREMIUM GRADE, STRONG ACID CATION EXCHANGE RESIN
WK100 IS SUITED FOR SOFTENING, AND CHEMICAL PROCESSING APPLICATIONS.

OPERATING CONDITIONS

Maximum Operating Temp:	250°F (120°C) in H+ form 280°F (140°C) in Na+
Form:	Shipped in Sodium Form
Resin bed Depth:	24"(600 mm) to 36"(900 mm)
Maximum Service Flow:	15 gpm/ft3 (120M3/Hr/M3)
Backwash Expansion space:	40 to 75%
Backwash flow Rate for 40 to 75% expansion at 77ºF (25ºC)	4 to 10 gpm/ft2 (9 to 25 M3/Hr/M2)
Regenerant:	NaCl for Na+ form.
Regeneration level:	3.7 to 10.0 lbs NaCl/ft3 (60-160 g NaCl/l)
Regenerant concentration:	5.0 to 15.0% for NaCl
Regeneration flow rate:	0.25 to 2 gpm/ ft3 (2 to 16 M3/Hr/M3)
Regeneration time:	20-60 minutes
Fast Rinse:	At service flow rate
Slow Rinse:	At regeneration flow rate
Rinse Volume:	25 to 40 gal/ft3 (3 to 5 M3/M3)

INFLUENT LIMITATIONS

Free Chlorine:	Not traceable
Turbidity:	Less than 2 N.T.U

WK 100 RESIN CHARACTERISTICS	
Type	Strong acid cation exchange resin
Matrix Structure	Cross linked polystyrene (8%)
Functional group	Sulphonic acid
Physical form	Moist spherical beads
Ionic form	Hydrogen/ Sodium (KW100 is the sodium form)
Particle Size	0.3-1.2mm
Screen Size U.S.S (wet)	16-50
Total Exchange capacity	2.0 meq/ml (Na^+) form / 1.8 meq/ml (H^+)
Swelling (approx.)	Na^+ to H^+ 7%
Moisture content (approx.)	52% (H^+), 45% (Na^+)
Backwash settled density	50 to 52 lbs/ft^3 (800 to 840 g/l) in H^+ form 52 to 55 lbs/ft^3 (840 to 880 g/l) in Na^+ form
Operating pH range	0-14
Solubility	Insoluble in all common solvents
Shipping weight	0.82 Kg/l (approx.) in H^+ form 0.86 Kg/l (approx.) in Na^+ form

Water King
WATER CONDITIONING

TASK MASTER III™

1 ½ INCH COMMERCIAL INDUSTRIAL WATER SOFTENER AND FILTER VALVE

- The Task Master III™ is a 316 Stainless Steel 1½ inch, five cycle, water softener or water filter control valve.
- There is only one moving part – the piston.
- The valve body is 316 SS and the piston is stainless steel with EPDM seals and inserts.
- The valve has two different tank adaptors allowing top mount on a fiberglass tank or side mount on the face piping.

- The housing for the brine ejector is cast into the valve body making it an integral part of the valve.
- The piston is motor driven and is not dependent on water pressure. It shifts smoothly without water hammer. The drive assembly positions the plunger for each of the five cycles.
- The valve design assures synchronization of the drive assembly with the electronic timer and optical sensors making certain the plunger is correctly positioned for each of the five cycles of softening.
- ERCt 99-day electronic timer with ability to independently program each cycle time.
- ERCd demand regeneration timer with variable reserve.
- The electrical enclosure carries a NEMA 4 rating.
- Since brining and process control often must be coordinated with the regeneration cycles of a softener, the valve is designed to provide an on/off signal and dry contacts for external electrical functions.
- Temperature rating is 180°F. Operating pressure is 125 psi.
- 71 gpm backwash rate (at 25 psi head loss)
- Valve coefficient is 15.
- Top Mount and Side Mount tank adaptors =>

Water King
WATER CONDITIONING

ERCd Controller

NEMA 4 / IP65 Style Enclosure

Intended for indoor or outdoor use primarily to provide a degree of protection against corrosion, windblown dust and rain, splashing water, and hose-directed water; undamaged by the formation of ice on the enclosure. The enclosure door must be kept tightly closed. Any modifications to this product (i.e. added holes for cable entry/mounting, conduit connections...etc.) may void the intended NEMA4/IP65 rating. NEMA 4/IP65 and UL rated fittings should be used when modifying the enclosure.

Variable Reserve Function (VRF)

The ERCd control has a variable reserve function, which automatically adjusts the reserve to the water usage schedule. Each day the ERCd reviews the last four weeks of water usage (demand as measured by the flow meter) for the same day of the week to determine if the remaining capacity is adequate for the next day. If not, it will initiate an automatic regeneration. Default regeneration time is 2:00 am. The VRF does not operate in twin alternating mode.

Backwash Cycle	0-250 minutes
Regenerant Draw Cycle	0-250 minutes
Slow Rinse Cycle	0-250 minutes
Fast Rinse Cycle	0-250 minutes
Reserve Type	Variable Delayed Regeneration, Fixed Delayed Regeneration, Variable Immediate Regeneration, Fixed Immediate Regeneration
K-Factor	0.01-99.99

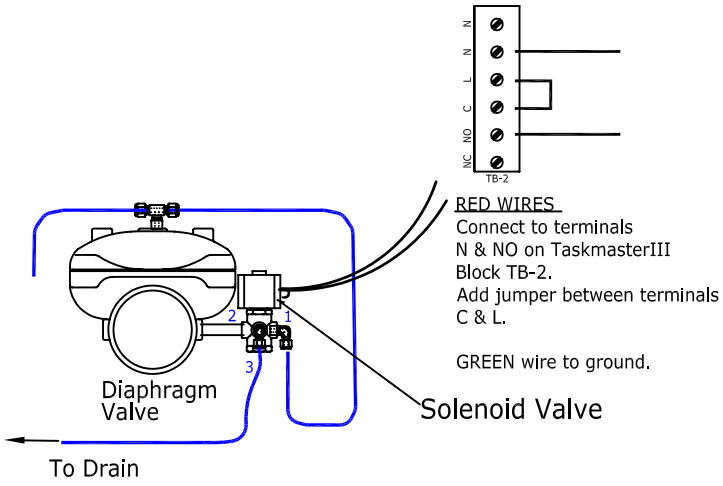

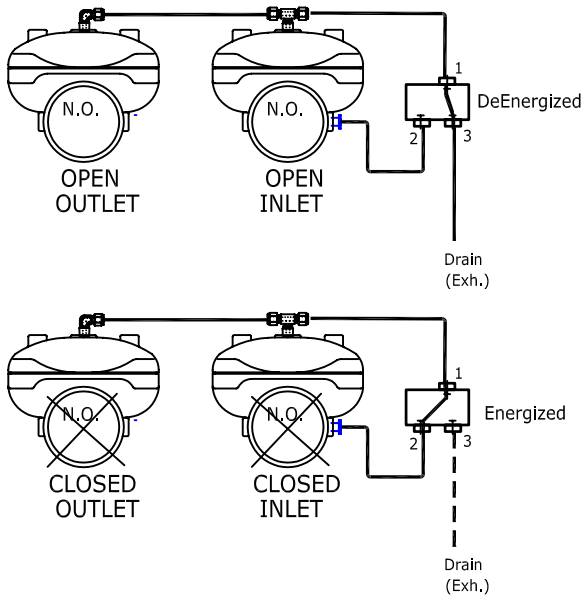

OPERATION DIAGRAM

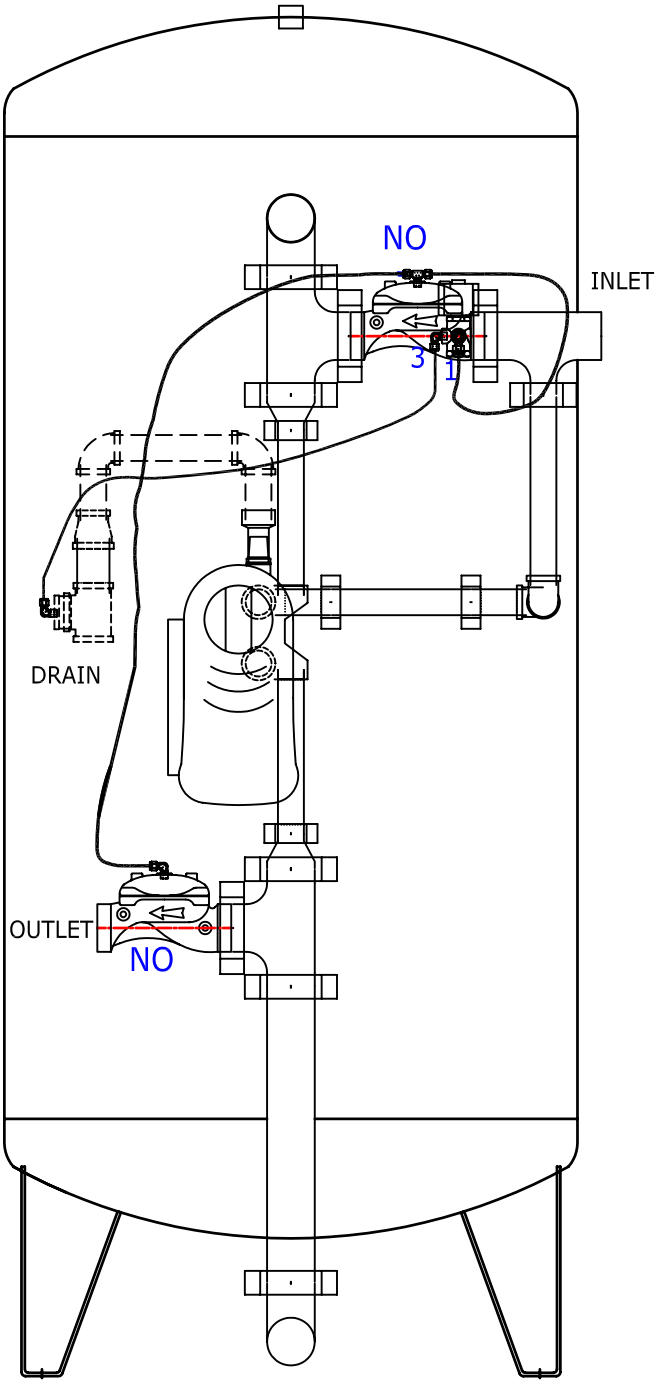

SUPER FLOW KITS (SFK) Includes two N.O. Diaphragm Valves, Solenoid Valve, Tubing, and Fittings

Super Flow Kit (DM 200 valves) 2" 720032
Super Flow Kit (DM 300 valves) 3" 720033
Super Flow Kit (DM 400 valves) 4" 720034

A Super Flow Kit provides inlet and outlet bypass valves which are open during service and closed during regeneration.
This allows the MF Task Master III five cycle valve to perform the regeneration functions. During service the valve is bypassed allowing higher flows.
A Super Flow Kit could be called a service flow bypass.

SEE 900975 FOR SOLENOID INSTALLATION AND WIRING

BY:	No.	REVISION	DATE	CK'D
.	0	PRELIMINARY	09/25/2009	.
	1	REDRAWN	05/18/2010	
	2	REVISED	01/23/2012	

Water King

LITERATURE # 900975-3
MF SUPER FLOW KIT

SCALE @ 24"x36"	DRAWING NUMBER	SHEET
N.T.S.	900975-3	01 /0 1

102 Charbonnet Rd., Duson, Louisiana, 70529 U.S.A.
Telephone: (337) 988-2360 * Fax: (337) 981-7922
www.waterking.com

PW300 Flow Meter

Special Features

- The electronics are isolated from water.
- The 1 ½" and 3" (DN 40 and DN 80) flow meters have cast, passivated and machined stainless steel (CF8m) with female NPT connections. (CF8m is the cast equivalent of 316 SS)
- Meters are compact, lightweight and easy to install.
- All PW series meters have the same paddle wheel assembly facilitating service and parts availability.
- The paddle wheel assembly is serviceable without removing the meter body from plumbing. It has an o-ring seal and four screws.
- Design Pressure 125 psi. Design temperature 100°F.

Hall Effect

The PW series meters have a paddle wheel with a magnet mounted in the wheel. Every time the paddle wheel rotates, a pulse of electrical current is generated. This is called the Hall Effect. Flow is registered on an external device by counting the pulses. The paddle wheel assembly is corrosion-proof with a stainless steel shaft.

PW 300 Stainless Steel Meter Body

Paddle Wheel Assembly

PW 075 Noryl Meter Body

PW 150 Flow Meter Assembly

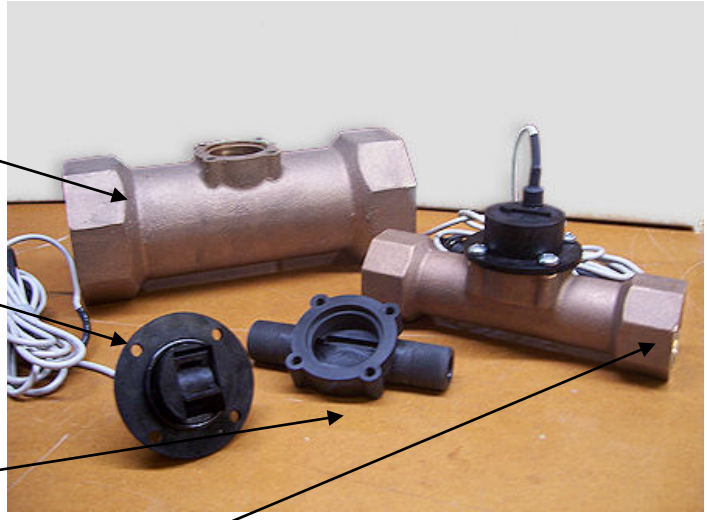

DATA

PW 300		
Size	Inches	3”
Pipe Thread		FNPT
Minimum Flow	GPM	20
Maximum Flow	GPM	470
C_V		590
K – factor	Pulses/gallon	7
Meter Body Material		316 SS
A	Inches	10
B	Inches	8
C	Inches	6

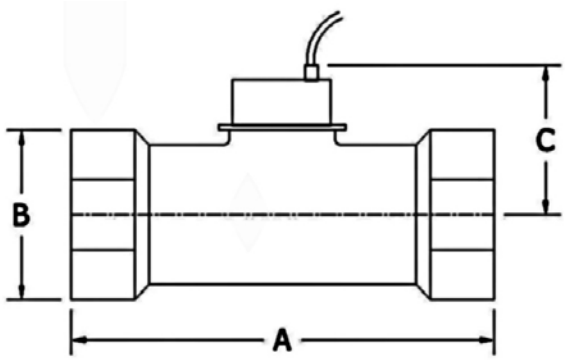

PW 300

PW 300		
Size	mm	DN 80
Pipe Thread		FNPT
Minimum Flow	Lps	1.3
Maximum Flow	Lps	29.7
C_V		590
K – factor	Pulses/liter	1.8
Meter Body Material		Brass
A	mm	254
B	mm	101
C	mm	89

Pressure Loss in PW Series Meters

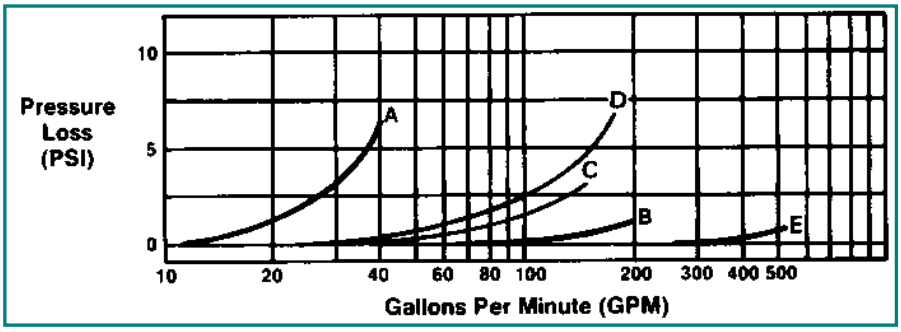

All meters have the same paddle wheel assembly.

	Meter Model	Pipe Size of Installation	
A	PW 075	3/4" NPS	DN 20
B	PW 150	1 1/2" NPS	DN 40
C	PW 150	2" NPS	DN 50
D	PW 150	2 1/2" NPS	DN 65
E	PW 300	3" NPS	DN 80

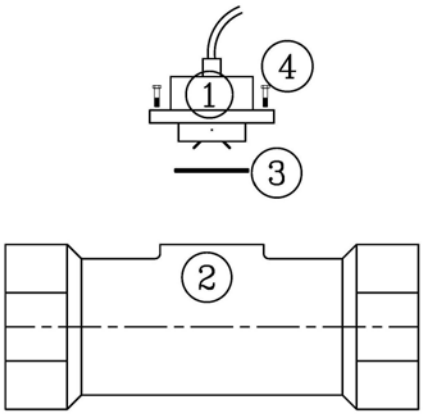

PARTS LIST – WATER KING PW SERIES

	MODEL	PW300		
	METER ASSEMBLY (with color coded three wire leads) (1)	500864		
1	PADDLE WHEEL ASSEMBLY (with color coded three wire leads) (1)	500850		
2	FLOW METER BODY	300864		
3	O-RING	400633		
4	MOUNTING SCREW (4 REQUIRED)	400334		

(1) Standard cable is 10 ft (3 meters). Add –50 to part number to order 50 ft (15 meters) cable on paddle wheel assembly.

PW Series Flow Meters are manufactured by Water King in Louisiana

BILL OF MATERIALS		805077 24" x 50" BRINE TANK ASSY.	
ITEM	PART#	DESCRIPTION	QTY.
A	505011	4"x44" BRINE WELL ASSEMBLY	1
B	200145	⅜" OVERFLOW FITTING	1
C	200613	24" SALT PLATFORM PLASTIC	1
D	706022-S	⅜" TOUGH STUFF BRINE VALVE	1
E	100361	1-1/2" x 20-3/8" SCH.40 PVC PIPE	7
F	200376	24" x 50" BRINE TANK WITH COVER	1
G	400258	WATER KING DECAL - WIDE	1
H	401237	OVERFLOW WARNING LABEL	1
I	INST	USE ⅝" DRILL BIT TO DRILL HOLES	

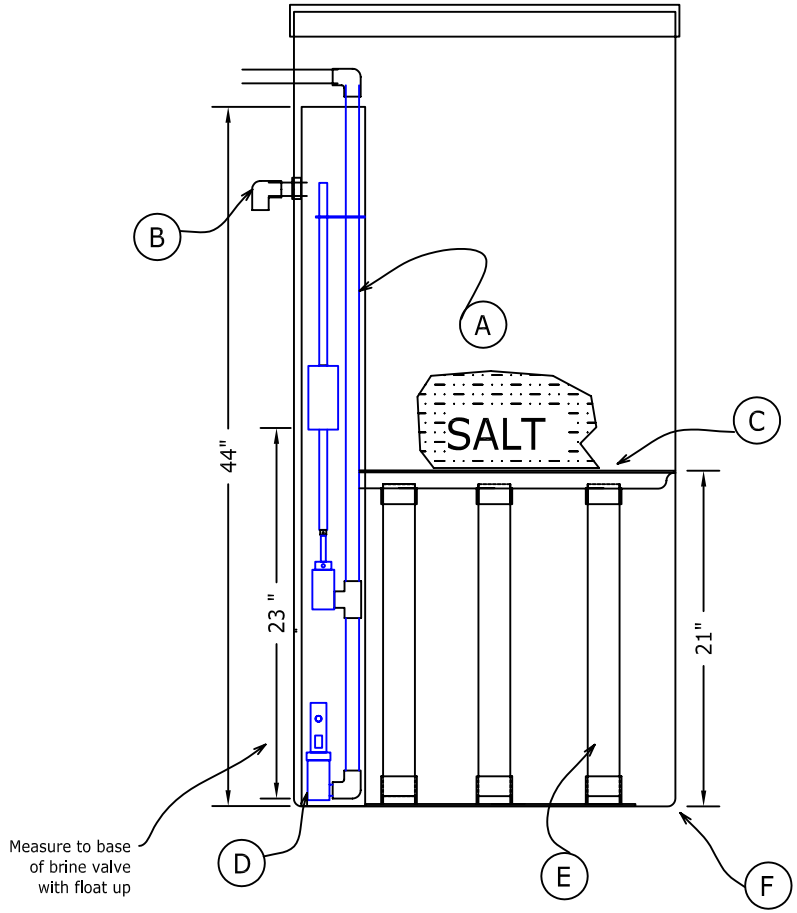

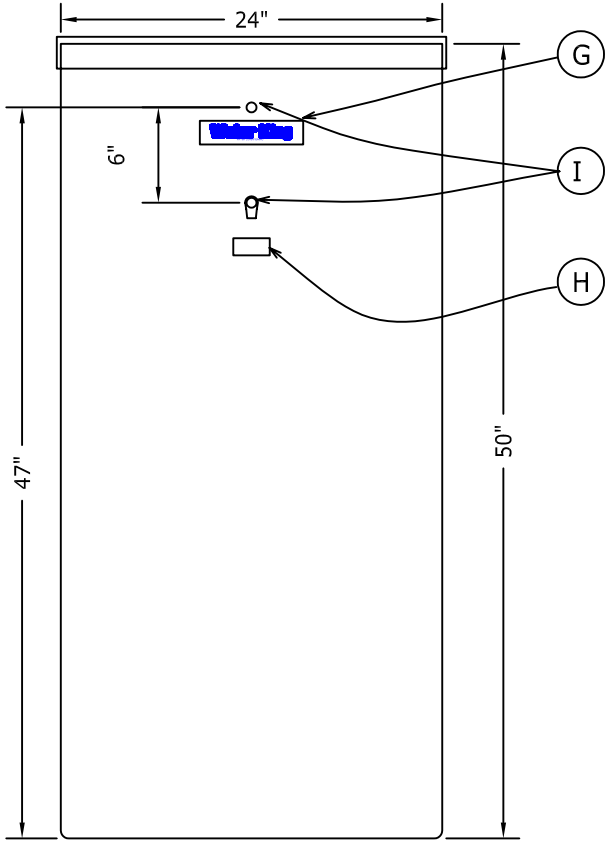

RELATED PARTS:
200126-2 BRINE LINE ASSY.
200442-2 BRINE DIRECTOR ASSY.
200441-2 BRINE DIST. ASSY.

SALT DRAW: 106 Lbs.
SALT STORAGE: 580 Lbs.
UNITS SHIPPED WITH:
180, 240, 300

BY:	No.	REVISION	DATE	CK'D
RLR	1	PRELIMINARY	04/28/2008	HM
RLR	2	UPDATED / FOR FABRICATION	12/09/2011	JL

102 Charbonnet Rd., Duson, Louisiana, 70529, U.S.A.

Water King

Telephone: (337) 988-2360 * Fax: (337) 981-7922

805077
24" X 50" BRINE TANK- 21"SP
ASSEMBLY DRAWING

SCALE	DRAWING NUMBER	SHEET
N.T.S.	805077	01 / 01

www.waterking.com

J:\Drawings\Literature\Brine Tank Assemblies\AutoCAD Files\805077.dwg, 12/19/2011 3:23:17 PM, Adobe PDF,
Letter, 1:12.0807, Water King Inc.

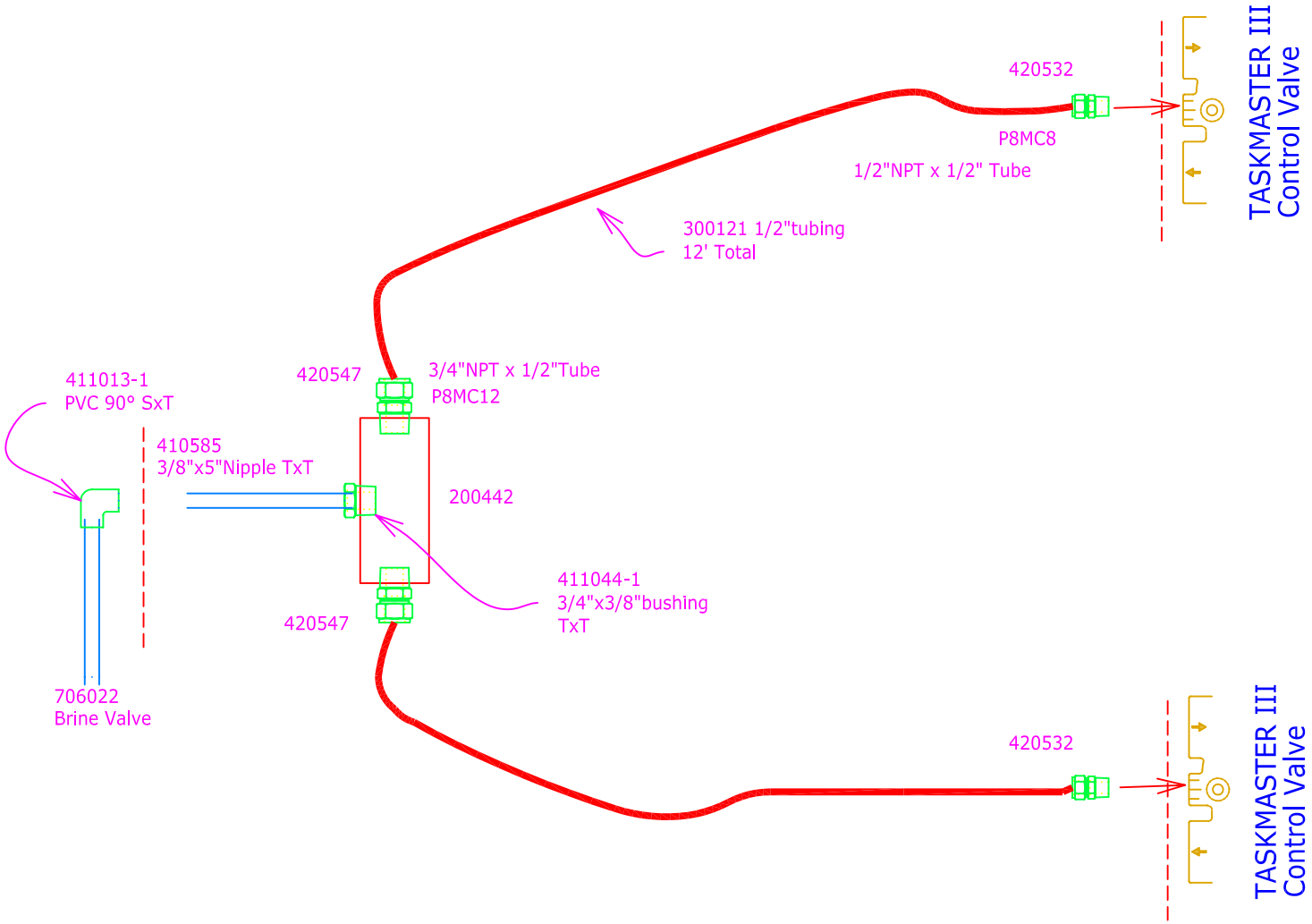

BY:	No.	REVISION	DATE	CK'D
.	0	PRELIMINARY	04/26/2010	.
	1	.	.	

Water King
WATER CONDITIONING

102 Charbonnet Rd., Duson, Louisiana, U.S.A. 70529

Telephone: (337) 988-2360 * Fax: (337) 981-7922

BRINE DIRECTOR ASSEMBLY
PART # 200442-2
3/8" BRINE VALVE / 1/2" BRINE LINE

SCALE @ 24"x36"	DRAWING NUMBER	SHEET
N.T.S.	200442-2	01 /0 1

www.waterking.com

Accumatic

ACCUMATIC™ BRINE SYSTEM

The Accumatic™ brine system consists of a brine tank and an internal (also called Throat & Nozzle Assembly) or external brine ejector mounted inside (injector) the Task Master III™ or mounted externally (educator) as part of a valve nest. The brine tank consists of a brine valve, a brine well, a salt platform, and an overflow assembly.

The brine system applies a salt solution to the softener to regenerate the cation exchange resin. Saturated brine (26% NaCl by weight) is drawn from the brine tank by the ejector. Each model of softener has a different ejector to generate a different brine flow rate. The corrosion proof ejectors are sized to dilute the saturated brine to 10% NaCl by weight. This brine concentration minimizes salt use during regeneration.

To create the saturated brine, dry salt is added to the brine tank, where it is dissolved in water. Since there is always an excess of salt, the brine solution is saturated. In the high grid plate design, the dry salt is not allowed to fill the bottom of the brine tank.

The saturated brine is drawn from below the grid plate (and below the salt bed) eliminating salt bridging and mushing. The Accumatic™ system controls the amount of brine solution added during regeneration and automatically refills the brine tank with water after regeneration. Because of the high grid plate, brine volume is not dependent upon void space in the salt bed. Brine drawn during regeneration is repeatable and accurate.

Features:

- **Made from Rugged PVC Pipe.** The Accumatic™ brine valve is available in ⅜, ½, ¾", 1" and 1¼" sizes. All sizes are constructed of heavy duty Sch.80 PVC. The sizes are I.D. as in pipe size, not O.D. as in tubing size. Our ⅜" ID brine valve is the same size as other ½" O.D. valves. The Accumatic brine valve is made from pipe, not tubing.
- **Very precise measurement of brine.** The Accumatic™ valve provides accurate volumetric control of brine draw. The same amount is drawn every time. The voids of the salt do not affect the brine draw.
- **Brine check** in the brine valve prevents air draw into mineral tank.
- **Positive pressure** is applied to seat the brine valve to prevent brine contamination during the service cycle.
- **Standard systems** have a fixed brine float which is factory preset at a brine draw which works for the system. Brine draw can be adjustable by adding the optional adjustable brine float.

ACCUMATIC™ BRINE SYSTEM OPERATION

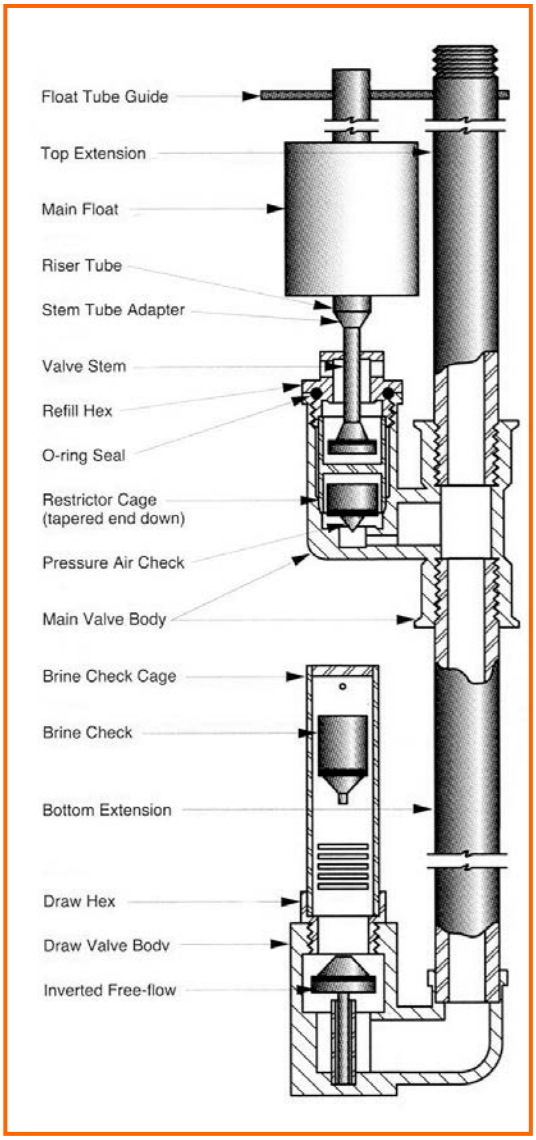

1. The Task Master III™ valve shifts to the brine position. Flow now passes through the brine injector mounted inside the valve body (internal injector). (See part #2 on the exploded view of the Task Master III™.) The injector draws a vacuum on the brine line.
2. This vacuum releases the brine valve seal (originally seated by incoming fill water pressure). The Free-flow valve drops open allowing brine to be drawn from the tank. As water is drawn from the tank, the main float will drop to allow re-fill. At the same time, the vacuum draws the air check valve closed to prevent the drawing of air through the re-fill valve.
3. The unit will continue to draw brine until the water level in the brine tank reaches the bottom of the brine riser tube. At this time the brine check will seat. This again prevents air from being drawn into the system. The Task Master III™ valve remains in brine position and water continues to pass through the injector even though it is not drawing brine. This cycle is called Slow Rinse. Slow rinse ends when the cycle timer advances the piston to the Fast Rinse position.
4. In the Fast Rinse position (and all other positions except Brine Draw) the brine line is under positive pressure. This positive pressure lifts the inverted free-flow valve and the air check valve and allows water to begin refilling the brine tank.
5. Refilling continues until the water level in the brine tank reaches the preset level and the float causes the brine valve seat and seal. The continuing positive pressure on the brine line maintains this seal.
6. The fresh water, which entered the brine tank, is now in contact with solid salt. Over the next few hours, the water becomes saturated with salt creating saturated brine.

Component Information:

- **Brine Tank** Is manufactured from High Density Polyethylene or fiberglass with no accessories or perforations.
- **Brine Well.** 505007 and 505011 are 4" in diameter and 505014 and 505015 are 5" in diameter.
- **Grid Plate.** Plastic Salt Platforms are used for Brine Tanks 30" in diameter and smaller. Masonite Salt Platform with nylon screen are used on Brine Tanks 39" in diameter and larger.
- **Grid Support.** Brine tanks with 18" in diameter shall have plastic legs. Brine tanks with 24" through 30" in diameter shall have Schedule 40 PVC legs. Brine tanks with 39" in diameter and larger shall have Super Web type support.
- **Brine Line Assemblies.** For simplex units with 30" diameter brine tanks and smaller, the brine line assembly consists of six feet of polypropylene brine line and appropriate Fast & Tite tube fittings.
- **Brine Director Assemblies.** For twin and twin alternating units with 30" diameter brine tanks and smaller a brine director is required. The brine director assembly consists of a ¾" brine director (Part № 200442), polypropylene brine line and appropriate Fast & Tite tube fittings.
- The brine system for MF systems 750 and larger with brine tanks 39" in diameter and larger requires an external brine injector. The brine line assembly consists of a ductile iron diaphragm valve, a brass check valve, and a brass ball valve with appropriate galvanized NPT pipe fittings. The interconnecting piping between the brine tank and the mineral tanks is not provided with the standard system and is installed by others. These systems with external eductors do not require brine directors.

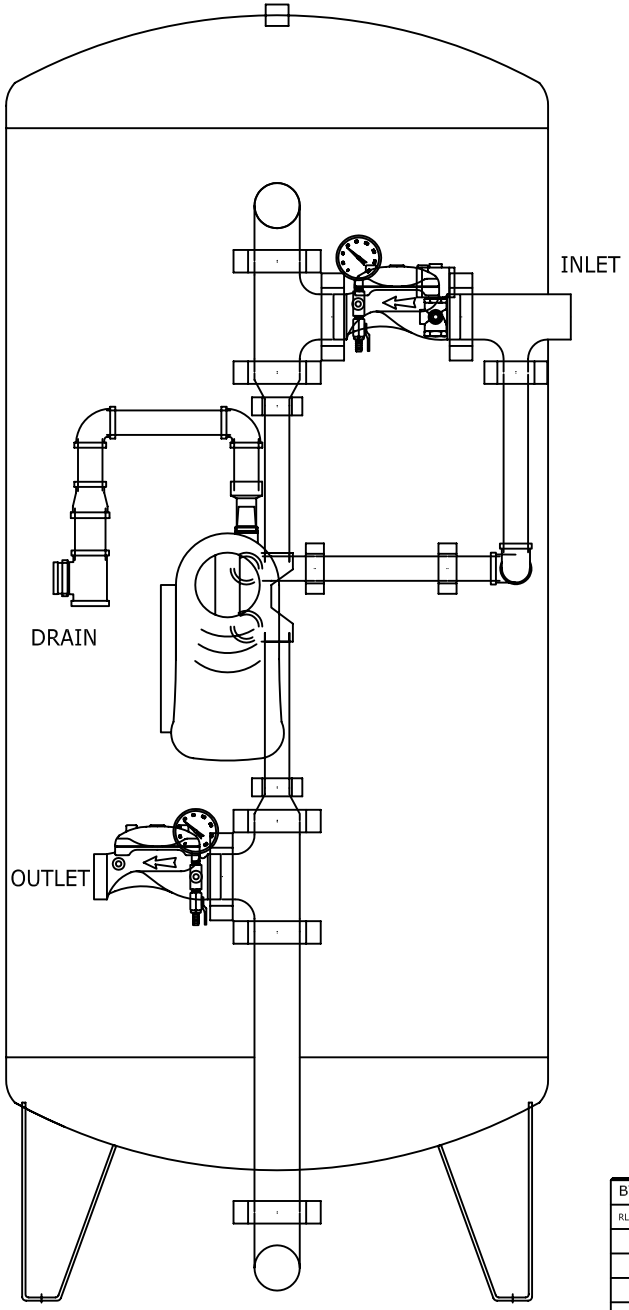

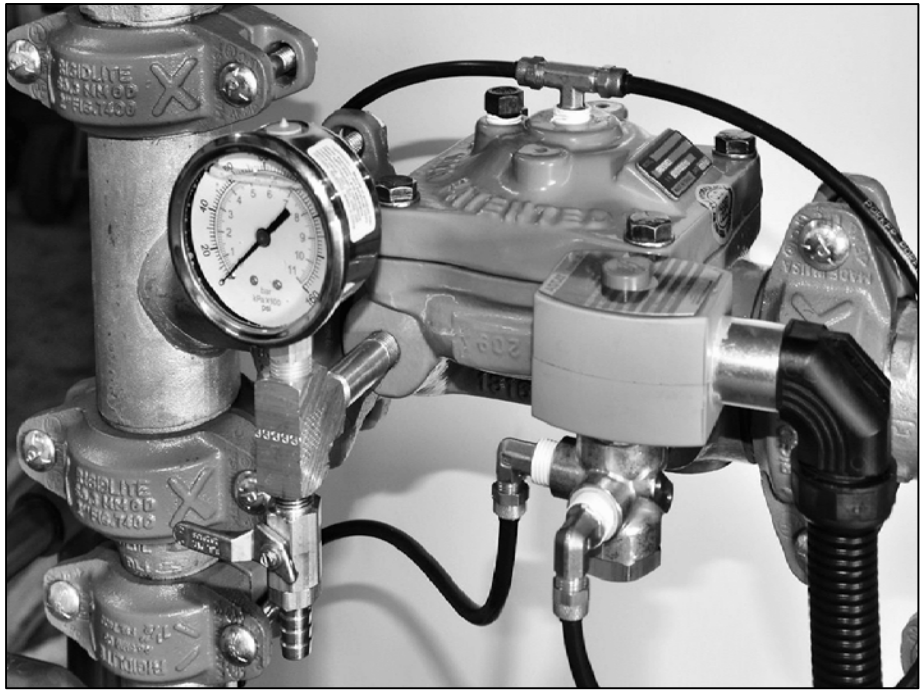

Specifications:
Pressure gauge and test tap kit;
A kit containing two liquid filled, stainless steel pressure gauges with 2 ½" Ø face, two brass ball valve sample taps with hose barb connections and associated brass connection. Fittings shall be provided for mounting in the 1/4" FNPT pre drilled and tapped ports in the inlet and outlet diaphragm valves.

BY:	No.	REVISION	DATE	CK'D
RLR	0	FOR PRODUCTION	10/25/2010	JEB

Water King

GAUGE AND TEST TAP KIT
#720075-8
VN &MF-SUPER FLOW SYSTEMS

SCALE	DRAWING NUMBER	SHEET
N.T.S.	900864-3	01 / 01

102 Charbonnet Rd., Duson, Louisiana, 70529, U.S.A.
Telephone: (337) 988-2360 * Fax: (337) 981-7922
www.waterking.com

J:\Drawings\Literature\PG & TTK\900864-3 Literature for 720075-8 VN PGTTK.dwg, 11/22/2011 9:57:39 AM, Adobe PDF, Letter, N.1.62003, Water King Inc.