Bill of Materials List
by Location ID

Inventory ID	Description	Loc ID		Quantity	Unit
923752-11	MF-750S-3-TA MF SUPERFLOW WATER SOFTENER TWIN ALTERNATING - TWO TANKS DEMAND REGENERATED	1			
100128-LC	36x72 COATED MINERAL TANK QUICK P/N: QWT3672LCW W.P.: 100 PSI G CODE: NON CONNECTION: 3" NPT VENT: 1-1/4" DRAIN: NONE LINING: TNEMEC 20 WHITE COATING: TNEMEC 20 WHITE	1	Item	2.0000	EA
100343	UPPER DIST ASSY 30-36" DIA, 1-PT, 3 SINGLE POINT SCH 80 PVC 3" MALE NPT CONNECTION 3" FOR TANKS WITH 3" COUPLING	1	Sub	2.0000	EA
500000-3	LOWER DIST ASSY 36" DIA 4PT 3" FOUR POINT SCH 80 PVC 3" MNPT CONNECTION FOR TANKS WITH 3" BOTTOM COUPLING	1	Sub	2.0000	EA
806623	FACE PIPE MF 3 SUPER 42 TANK EX SUPER FLOW PIPING ASSEMBLY FOR MF SERIES SOFTENERS SCH 40 GROOVED GALVANIZED PIPING 3" INLET OUTLET 1" EXTERNAL EDUCTOR 1" BOTTOM DRAIN	1	Sub	2.0000	EA
806689	PIPE MF EXT EDUCTOR 1" CV,BV PIPING FOR EXTERNAL EDUCTOR FOR MF SYSTEMS. INCLUDES NIPPLES, CHECK VALVE, BALL VALVE AND DIAPHRAGM VALVE.	1	Sub	2.0000	EA
479930	RESIN PK 750 36X72 S 25 , 3 1/2 25 FT3 8% CROSS LINK CATION RESIN 3 1/2 FT3 GRAVEL FOR 36X72 TANK	1	Sub	2.0000	EA
805178	39X60 BRINE TANK ASSY RM/24SP ACCUMATIC BRINE TANK ASSEMBLY DIAMETER: 39 INCHES HEIGHT: 60 INCHES ROTATIONALLY MOLDED HDPE TANK 5" BRINE WELL 1/2" BRINE VALVE 24" HIGH SALT PLATFORM SUPER WEB GRID SUPPORT	1	Sub	1.0000	EA
707150-5FFNS	TM3 ERCd PLG 35 / 1.5 N AM SIDE TASK MASTER III 316 STAINLESS STEEL	1	Sub	1.0000	EA

Inventory ID	Description	Loc ID		Quantity	Unit
	5 CYCLE WATER SOFTENER VALVE PRIMARY ERCd CONTROLLER PLUGGED INJECTOR 35 GPM BACKWASH 1 1/2" NPT SIDE MOUNT 110V 60 HZ USA PROGRAM				
707150-6FFNS	TM3 SEC PLG 35 / 1.5 N AM SIDE TASK MASTER III 316 STAINLESS STEEL 5 CYCLE WATER SOFTENER VALVE SECONDARY NO CONTROLLER PLUGGED INJECTOR 35 GPM BACKWASH 1 1/2" NPT SIDE MOUNT 110V 60 HZ USA PROGRAM	1	Sub	1.0000	EA
500843	PW300 3" FLOW METER ASSEMBLY (ERCd) PADDLE WHEEL FLOW METER 3" FNPT CONNECTIONS BRASS BODY NORYL PLASTIC PADDLE WHEEL HALL EFFECT METER CONNECTOR FOR ERCd CONTROLLER	1	Sub	1.0000	EA
720033-1	3" GRV SUPERFLOW S.O.K. w/EE 3" GROOVE DIAPHRAM VALVES SOLENOID TUBING CONDUIT AND WIRING FOR EXTERNAL EDUCTOR	1	Sub	2.0000	EA
320400-2	1" EJECTOR, PVC-80, RED EXTERNAL EDUCTOR SCH 80 PVC	1	Item	1.0000	EA
400904	4" FUNNEL	1	Item	1.0000	EA

End of Report

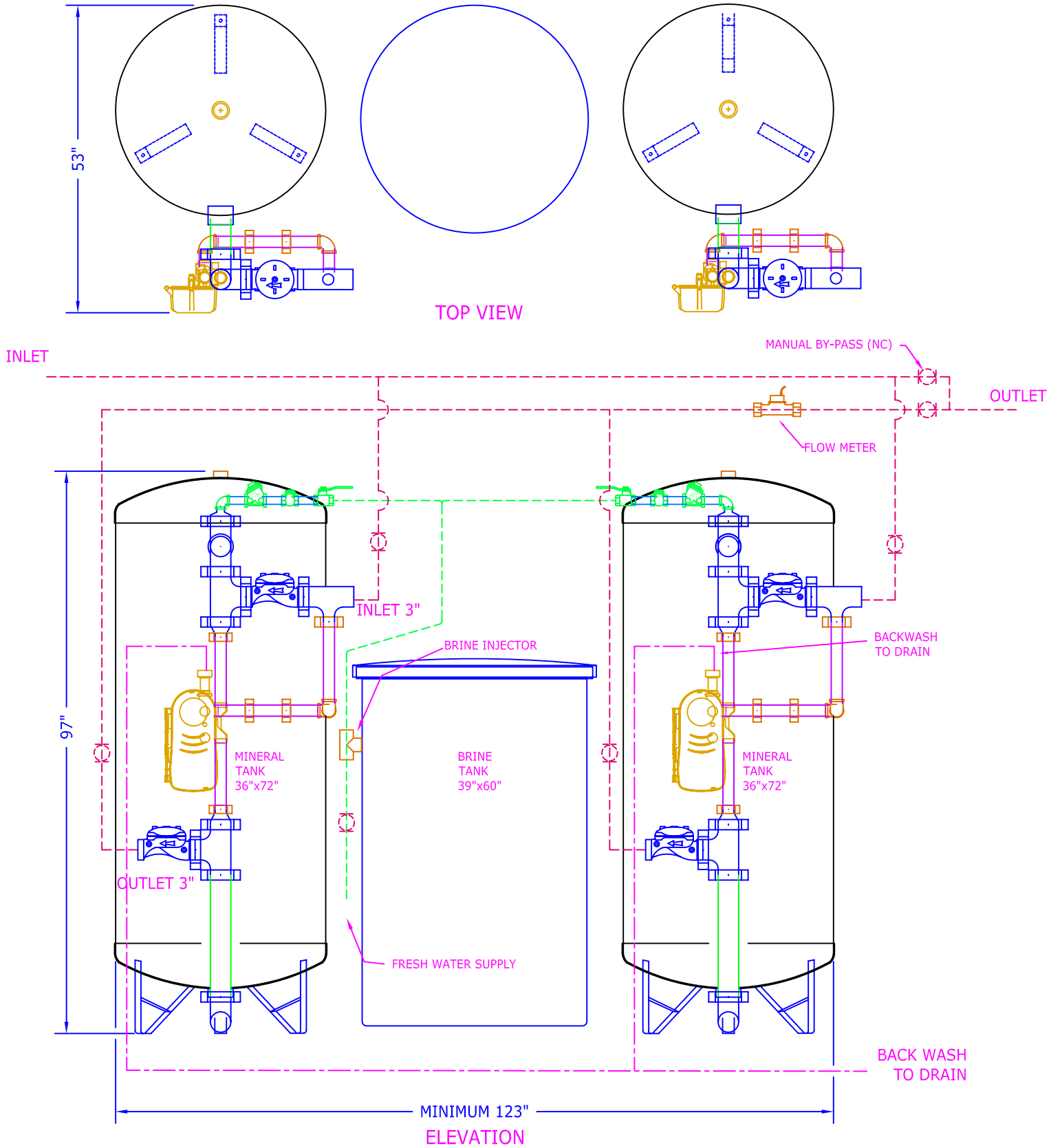

NOTES:
1) PIPING SHOWN IN DASHED LINES TO BE SUPPLIED BY CUSTOMER.
2) ALLOW 1 FOOT ABOVE TANKS FOR LOADING.
3) FLOW METER REQUIRES (15) PIPE DIAMETER LENGTHS BEFORE METER & (10) AFTER FOR PROPER OPERATION.
4) FLOW METER SHOULD BE MOUNTED HORIZONTALLY.

SHIPPING WEIGHT	4689 Lbs.
OPERATING WEIGHT	

BY:	No.	REVISION	DATE	CK'D
RLR	0	SUBMITTAL FOR APPROVAL	04/11/2011	JEB

Water King

923752-11
MF-750S-3-TA SOFTENER
GENERAL ARRANGEMENT

SCALE	DRAWING NUMBER	SHEET
N.T.S.	MF-750S-3-TA	01 / 01

102 Charbonnet Rd., Duson, Louisiana, 70529, U.S.A.
Telephone: (337) 988-2360 * Fax: (337) 981-7922
www.waterking.com

J:\Drawings\catalog\MF\MF-750S-3-TA.dwg, 4/25/2011 1:24:12 PM, Adobe PDF, Letter, 1:22.626, Water King Inc.

Water King

Water Softener Performance		
Part No.:	**923752**	**-11**
Model Number: MF	**750**	**S3" TA**
Capacity Per Vessel:	731,000	grains at preset brine draw
System Capacity:	1,462,000	grains
Brine Tank Salt Storage:	2,040	lbs as NaCl
Preset Brine Draw:	244	lbs per regeneration
Salt Dosage:	10	lb salt / ft3 of resin
Backwash Rate:	35	gpm
Flow vs Headloss (1)		
Head Loss	Flow	
5 psi	99	gpm
10 psi	154	gpm
15 psi	**198**	**gpm - Continuous Flow**
20 psi	238	gpm
25 psi	**273**	**gpm - Peak Flow**

(1) Twin headloss includes losses from the inlet and outlet diaphragm valves comprising the super flow kit (SFK) plus losses from the media, piping and distributors

Twin Alternating (-TA). Twin alternating units operate so that once a predetermined amount of water has passed through the flow meter the ERCd initiates regeneration of the exhausted unit placing its twin in service. One unit is on line and one is either in standby or service. The ERCd demand initiated regeneration controller controls the regeneration cycles for both of the twin alternating units. TA systems shall have two mineral tanks, two Task Master III control valves (a primary and a secondary), one brine tank with brine director, one ERCd controller, one PW, PWS or TM series flow meter and two shut off kits. The ERCd shall provide regeneration initiation and meter display.

MF SERIES SPECIFICATION (MF 300 TO 1500S 3" TA SYSTEMS)

Mineral Tank

Mineral Tank (Standard Non Code Vessels). The non-code vessel shall be A36 carbon steel or better rated at 100 psi working pressure designed to a factor of safety of 3.0. The inlet and outlet shall be 3000 psi NPT full couplings. The inlet shall be in the side wall and the outlet shall be in the center of the tank bottom shell. Each tank shall have a 1" top center fitting. Tanks 20, 24, and 30" Ø inch diameter shall have a 4" x 6" handhole in the side shell and in the top head. Tanks 36" Ø and larger shall have a 4" x 6" handhole in the side shell shall have a 12" x 16" manway in the top dome. Tanks 36" Ø and larger shall have lifting lugs on the top dome. Vessels have strap type legs. Tanks 48" and larger have an additional lifting lug on the bottom dome and angle legs (rather than strap legs).

Mineral Tank (Optional Code Vessels). ASME code stamped tanks shall be available. Tank shall be clearly specified as ASME code with a specified working pressure. ASME Code vessels are provided with a U1A form. Additional documentation can be provided at additional costs. All required documentation must appear on Purchase Order.

Coating and lining. Tanks shall be prepared for internal and external coating with a SPCC 11 near white sand blast. Internal and external coating shall be two - 3 to 4 mill coats of white Epoxy. Paint shall be applied according to manufacturer's recommendations. Paint reports and mill thickness reports shall be provided if requested on Purchase Order.

Upper Distributor. A top dome splash distributor with an opening equal to or larger than the unit pipe size shall be installed in the mineral tank. The internal distributor piping shall be SCH 80 PVC.

Lower Distributor. The bottom distributor shall be a multipoint system using 2½" Ø single point molded distributor heads with 2½" of slotted length and a 1½-inch MNPT threaded connection. The slots shall be .012″ - .016″ wide to retain mineral and the total slot area shall be equal to or larger than the inlet pipe size.

Face Piping. The softener(s) shall ship with face piping mounted on the vessels. Face piping shall be schedule 40 galvanized carbon steel with NPT fittings for 1 ½" and 2" piping and grooved (GRUV LOK) fittings for 1 ½" to 6" piping. Smaller sizes may be either. Piping for Super Flow or service flow bypass shall be schedule 40 grooved fitting galvanized carbon steel.

Resin Pack. The resin shall be sodium form polystyrene 8% divinyl benzene cross linked resin with clear spherical beads. Resin beads shall be 16-50 US Standard Mesh with a particle size range of 0.3 to 1.2 mm. The resin shall be clean and packaged in sealed plastic bags weighing 55 lbs or less. Underbedding shall be #20 graded washed flint gravel sieved between 1/8" and 1/16".

Brine Tank. The brine system shall be of the Accumatic™ high grid plate design. The brine tank shall be blow molded (BM) or rotationally molded (RM) HDPE, including a cover. The system shall include a SCH 80 PVC float operated brine valve to control refill shut-off and refill flow rate. Brine volume is to be repeatedly accurate within 10% and not dependent on salt bed void space for brine volume. Brine draw is to be volumetrically controlled, not timed.

Brine Director Assembly (BDA). Brine shall flow through the brine valve to the mineral tank via a brine director and tubing assembly. The brine director shall be a shuttle type valve

that directs the brine to the unit in regeneration. The tubing shall be Polyethylene with Liquid-Tite Tube x NPT connectors. The brine inlet fitting to the valve is ½" MNPT and the connection to the brine director shall be ¾" MNPT.

TM3 Control Valve. The main control valve(s) shall be the Task Master III™ with electronic controller to actuate the cycles of backwash, brine, slow rinse, fast rinse, and service for a water softener (or backwash, rinse and service for a filter). The control valve(s) shall be Task Master III™ 5-Cycle, multi-port control valve(s) with machined passivated CF8M Type 316 Stainless Steel body, Type 316 Stainless Steel piston assembly, and EPDM inserts and seals with electronic controller and drive motor assembly in a NEMA 4/IP65 Style Enclosure. The valve shall operate with a single motor driven piston positioned by optical sensors. Valve inlet and outlet shall be 1 ½" FNPT. Backwash drain shall be ¾" or 1 ½" depending on flow. The brine inlet shall be ½". The one piece brine eductor shall be installed in the valve. The valve shall be equipped with threaded ¼" FNPT ports for the installation of sample taps and pressure gauges. (Test taps and gauges are optional.) Hard water by-pass shall be available during all regeneration cycles at 70 gpm or at the peak flow rate of the unit, at a pressure drop less than 25 psi, whichever is less. No hard water bypass option is obtained by adding a shut off kit or super flow kit to the valve. The valve shall be of a single piston design and shall not use multiple plungers or diaphragm valves. Maximum rated power shall be 125 watts with available current options of 115 VAC, 230 VAC, 100 VAC, 200 VAC, in 50 or 60 Hertz. Ambient operating temperature range shall be 34° F (1° C) to 150° F (65° C). Fluid temperature range shall be 34° F (1° C) to 180° F (82° C). Operating pressure range shall be 20-125 psi (1.38 - 8.6 bar).

PW Series Flow Meter Assembly. The flow meter shall be a PW series brass body, paddle wheel flow meter. The electronics shall be isolated from contact with the water. The flow meters shall have cast and machined brass housings with female NPT connections. The paddle wheel assembly shall be corrosion-proof with a stainless steel shaft. Meters shall be serviceable without removing from plumbing. The flow meter shall have a plug and play type connector for the ERCd controller. The PW series meters have a paddle wheel with a magnet mounted in the wheel. Every time the paddle wheel rotates, a pulse of electrical current is generated. This is called the Hall Effect. Flow is registered on the ERCd by counting the pulses.

Super Flow Kit (SFK). A Super Flow Kit (SFK) shall consist of an inlet and an outlet diaphragm valve operated by a solenoid, which opens the valves when the unit is in service and closes the valves when the unit is in regeneration or standby. For the 2", 3", 4" and 6" SFKs the valves shall be DM200B, DM300B, DM400B, or DM600B grooved end, polyester coated and lined, 235 psi cast iron diaphragm valves.

Funnel. A 4 inch polyethylene funnel is provided to aid in loading the media.

System Operating Conditions. Maximum temperature shall be 100° F. Maximum Pressure shall be 100 psi. The pressure rating can be increased to 125 psi by specifying 125 psi vessels.

Other items. A standard soft water soap test kit shall be provided. A complete set of instructions, including installation, loading, start-up, adjustments, servicing, and a parts list shall be provided with the equipment.

Qualifications. A company that has continuously manufactured water softeners for at least twenty (20) years shall construct this equipment.

Pressure gauge and test tap kit. A kit containing two liquid filled, stainless steel pressure gauges with 2 ½" Ø face, two brass ball valve sample taps with hose barb connections and associated brass connection fittings shall be provided for mounting in the 1/4″ FNPT predrilled and tapped ports in the inlet and outlet of the Task Master III valve.

Water King

Water King, Inc.
102 Charbonnet Rd., Duson, Louisiana, U.S.A. 70529
Telephone: (337) 988-2360 * Fax: (337) 981-7922
www.waterking.com

NON-CODE WATER TREATMENT TANKS
EPOXY LINED & FINISH COATED IN WHITE EPOXY
NSF/ANSI STANDARD 61 CERTIFIED LINING
100 PSIG WORKING PRESSURE

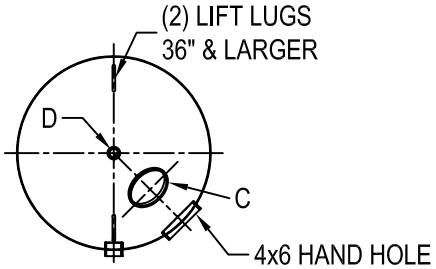

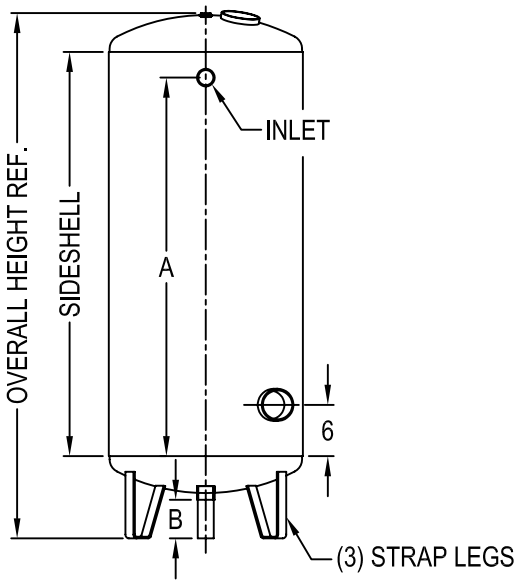

DIMENSIONAL CHART							
DIAMETER	SIDE SHELL	A	B	INLET/OUTLET	C	D	OAH
20"	54"	50"	6"	2" NPS	4" X 6"	1" NPT	67"
	60"	55-3/4"					73"
24"	54"	50"	6"	2" NPS	4" X 6"	1" NPT	69"
	60"	55-3/4"					75"
30"	54"	50"	6"	2" NPS	4" X 6"	1" NPT	73"
	60"	55-3/4"					79"
36"	60"	55-3/4"	9"	3" NPT	12" X 16"	1" NPT	86"
	72"	67-3/4"					98"
42"	60"	55-3/4"	9"	3" NPT	12" X 16"	1" NPT	87"
	72"	67-3/4"					100"

J:\Drawings\catalog\Tanks-NON code 20-42.dwg, 3/6/2013 3:16:14 PM, Adobe PDF, Letter, WATER KING, INC.

TANK DIA.	L
30	10 $\frac{1}{4}$
36	13 $\frac{1}{4}$
42	16 $\frac{1}{4}$
48	19 $\frac{1}{4}$
	CUT TO FIT
	TANK DIAMETER

Level/Inventory		Description	Unit	Quantity Each
0-100343		UPPER DIST ASSY 1-PT, 3"		
A	1-411122	3" ADAPTER PVC-80 (MNPT X SOC)	EA	1.0000
B	1-411072	3" 90 ELL PVC-80 (SOC)	EA	1.0000
C	1-411006	3" PIPE PVC-80 (PER FT)	EA	2.0000

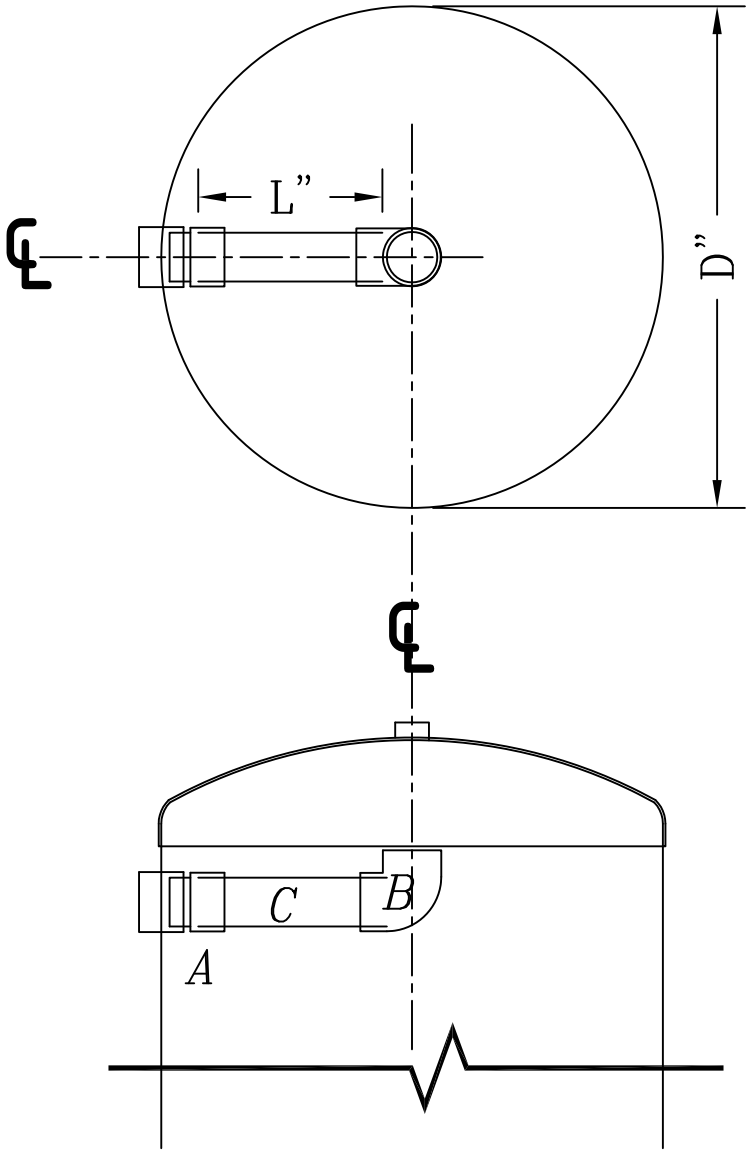

REV:	No.	REVISION	DATE	CK'D
	0	FOR FABRICATION	12/23/2011	JEB
	1	ADD SIZE TABLE	05/23/2014	JEB

Water King

100343
3" UPPER DISTRIBUTOR ASSEMBLY

SCALE	DRAWING NUMBER	SHEET
N.T.S.	100343	01 / 01

102 Charbonnet Rd., Duson, Louisiana, 70529, U.S.A.
Telephone: (337) 988-2360 * Fax: (337) 981-7922
www.waterking.com

J:\Drawings\Literature\Internals\Upper\AutoCAD Files\100343.dwg, 5/23/2014 9:33:06 AM, Adobe PDF, letter, 1:13.7797 WATER KING Inc>

500000-3 LOWER DIST ASSY 30/36" DIA 4PT 3"

	Part #	Description	Qty.
A	410595-8	3"X 8" NIPPLE PVC-80	0.50
B	411109-3	3" TEE PVC-80 (SOC)	1.00
C	411071	3" X 2" RED BUSH PVC-80 (SOC)	2.00
D	411003	2" PIPE PVC-80 (PER FT)	0.67
E	410579	2" TEE PVC-80 (SOC)	2.00
F	410599	2" X 1-1/2" RED BUSH PVC-80 (SxT)	4.00
G	703023-1	1-1/2" MNPT DISTRIBUTOR ASSY	4.00

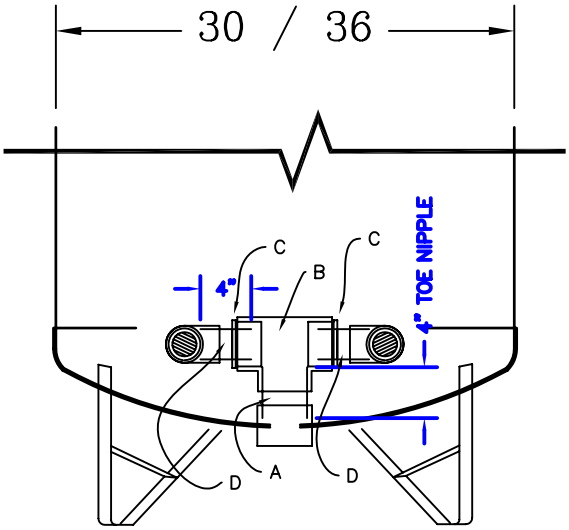

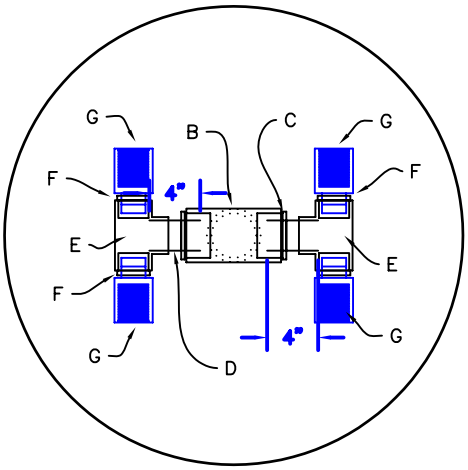

BY:	No.	REVISION	DATE	CK'D
RLR	0	FOR FABRICATION	12/22/2011	JEB

Water King

500000-3
30" & 36" LOWER DISTRIBUTOR ASSEMBLY

SCALE	DRAWING NUMBER	SHEET
N.T.S.	500000-3	01 / 01

102 Charbonnet Rd., Duson, Louisiana, 70529, U.S.A.
Telephone: (337) 988-2360 * Fax: (337) 981-7922
www.waterking.com

J:\Drawings\Literature\Internals\Lower\AutoCAD Files\500000-3.dwg, 12/22/2011 1:00:13 PM, Adobe PDF, Letter, 1:15.0799, Water King Inc.

WK 100 Softener Resin

WK100 IS A MULTIPURPOSE, PREMIUM GRADE, STRONG ACID CATION EXCHANGE RESIN
WK100 IS SUITED FOR SOFTENING, AND CHEMICAL PROCESSING APPLICATIONS.

OPERATING CONDITIONS

Maximum Operating Temp:	250°F (120°C) in H+ form 280°F (140°C) in Na+
Form:	Shipped in Sodium Form
Resin bed Depth:	24"(600 mm) to 36"(900 mm)
Maximum Service Flow:	15 gpm/ft3 (120M3/Hr/M3)
Backwash Expansion space:	40 to 75%
Backwash flow Rate for 40 to 75% expansion at 77ºF (25ºC)	4 to 10 gpm/ft2 (9 to 25 M3/Hr/M2)
Regenerant:	NaCl for Na+ form.
Regeneration level:	3.7 to 10.0 lbs NaCl/ft3 (60-160 g NaCl/l)
Regenerant concentration:	5.0 to 15.0% for NaCl
Regeneration flow rate:	0.25 to 2 gpm/ ft3 (2 to 16 M3/Hr/M3)
Regeneration time:	20-60 minutes
Fast Rinse:	At service flow rate
Slow Rinse:	At regeneration flow rate
Rinse Volume:	25 to 40 gal/ft3 (3 to 5 M3/M3)

INFLUENT LIMITATIONS

Free Chlorine:	Not traceable
Turbidity:	Less than 2 N.T.U

WK 100 RESIN CHARACTERISTICS	
Type	Strong acid cation exchange resin
Matrix Structure	Cross linked polystyrene (8%)
Functional group	Sulphonic acid
Physical form	Moist spherical beads
Ionic form	Hydrogen/ Sodium (KW100 is the sodium form)
Particle Size	0.3-1.2mm
Screen Size U.S.S (wet)	16-50
Total Exchange capacity	2.0 meq/ml (Na^+) form / 1.8 meq/ml (H^+)
Swelling (approx.)	Na^+ to H^+ 7%
Moisture content (approx.)	52% (H^+), 45% (Na^+)
Backwash settled density	50 to 52 lbs/ft^3 (800 to 840 g/l) in H^+ form 52 to 55 lbs/ft^3 (840 to 880 g/l) in Na^+ form
Operating pH range	0-14
Solubility	Insoluble in all common solvents
Shipping weight	0.82 Kg/l (approx.) in H^+ form 0.86 Kg/l (approx.) in Na^+ form

Water King
WATER CONDITIONING

BILL OF MATERIALS		805178 39" x 60" BRINE TANK ASSY.	
ITEM	PART#	DESCRIPTION	QTY.
A	505015	5"x48" BRINE WELL ASSEMBLY	1
B	200146	1/2" OVERFLOW ASSEMBLY	1
C	SW3960-24	39" SUPERWEB SALT PLATFORM	1
D	706044-60-S	1/2" TOUGH STUFF BRINE VALVE	1
E			0
F	200589-RM	39" x 60" BRINE TANK WITH COVER	1
G	400258	WATER KING DECAL - WIDE	1
H	401237	OVERFLOW WARNING LABEL	1
I	INST	USE 5/8" DRILL BIT TO DRILL HOLES	

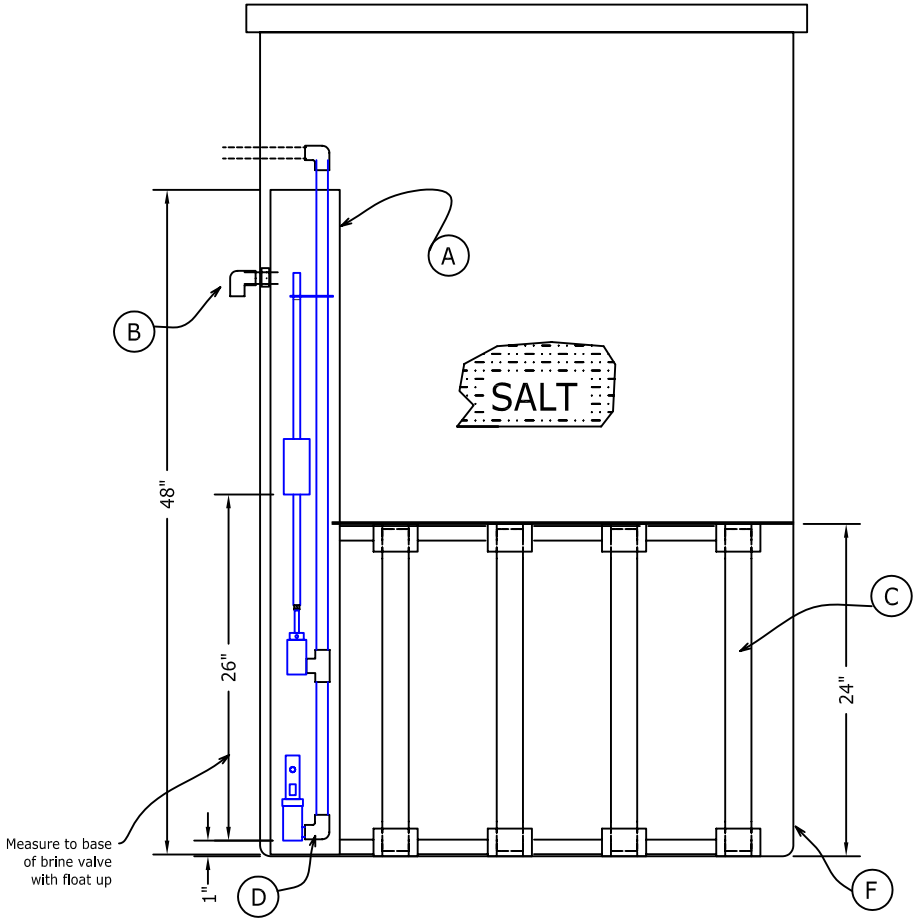

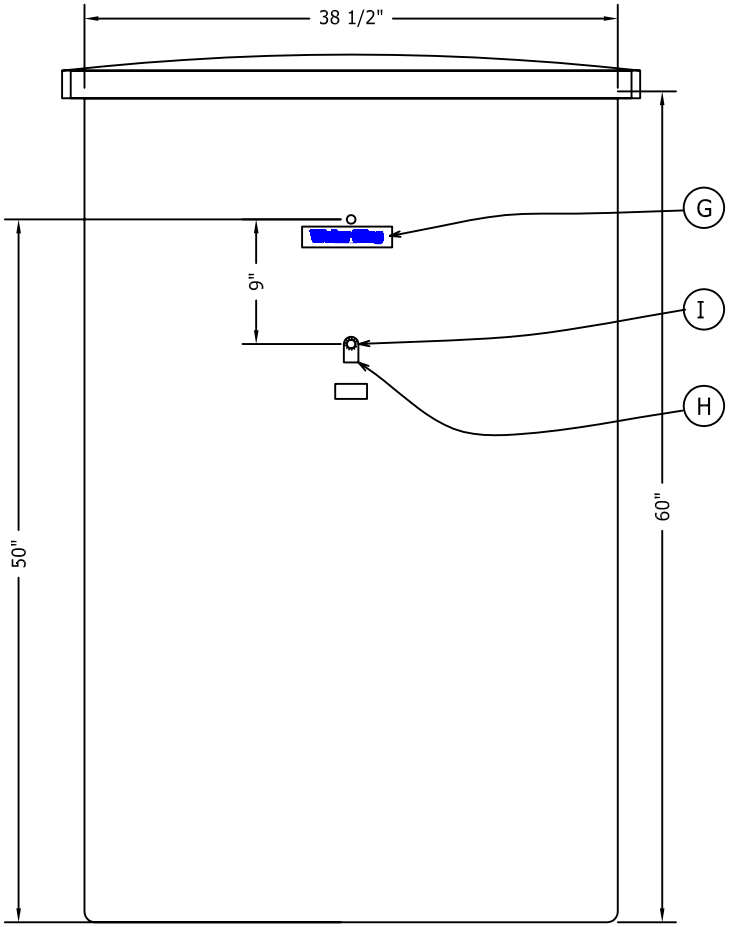

RELATED PARTS:
200126-3 BRINE LINE ASSY.
200442-3 BRINE DIRECTOR ASSY.
200441-3 BRINE DIST. ASSY

SALT DRAW: 244 Lbs.
SALT STORAGE: 2000 Lbs.
UNITS SHIPPED WITH:
600, 750

BY:	No.	REVISION	DATE	CK'D
RLR	1	PRELIMINARY	04/28/2008	HM
RLR	2	UPDATED / FOR FABRICATION	12/14/2011	JL

Water King

102 Charbonnet Rd., Duson, Louisiana, 70529, U.S.A.
Telephone: (337) 988-2360 * Fax: (337) 981-7922
www.waterking.com

805178
39" X 60" BRINE TANK- 24"SP
ASSEMBLY DRAWING

SCALE	DRAWING NUMBER	SHEET
N.T.S.	805178	01 / 01

J:\Drawings\Literature\Brine Tank Assemblies\AutoCAD Files\805178.dwg, 12/14/2011 3:36:40 PM, Adobe PDF, Letter, 1:13.8645, Water King Inc.

Accumatic

ACCUMATIC™ BRINE SYSTEM

The Accumatic™ brine system consists of a brine tank and an internal (also called Throat & Nozzle Assembly) or external brine ejector mounted inside (injector) the Task Master III™ or mounted externally (educator) as part of a valve nest. The brine tank consists of a brine valve, a brine well, a salt platform, and an overflow assembly.

The brine system applies a salt solution to the softener to regenerate the cation exchange resin. Saturated brine (26% NaCl by weight) is drawn from the brine tank by the ejector. Each model of softener has a different ejector to generate a different brine flow rate. The corrosion proof ejectors are sized to dilute the saturated brine to 10% NaCl by weight. This brine concentration minimizes salt use during regeneration.

To create the saturated brine, dry salt is added to the brine tank, where it is dissolved in water. Since there is always an excess of salt, the brine solution is saturated. In the high grid plate design, the dry salt is not allowed to fill the bottom of the brine tank.

The saturated brine is drawn from below the grid plate (and below the salt bed) eliminating salt bridging and mushing. The Accumatic™ system controls the amount of brine solution added during regeneration and automatically refills the brine tank with water after regeneration. Because of the high grid plate, brine volume is not dependent upon void space in the salt bed. Brine drawn during regeneration is repeatable and accurate.

Features:

- **Made from Rugged PVC Pipe.** The Accumatic™ brine valve is available in ⅜, ½, ¾", 1" and 1¼" sizes. All sizes are constructed of heavy duty Sch.80 PVC. The sizes are I.D. as in pipe size, not O.D. as in tubing size. Our ⅜" ID brine valve is the same size as other ½" O.D. valves. The Accumatic brine valve is made from pipe, not tubing.
- **Very precise measurement of brine.** The Accumatic™ valve provides accurate volumetric control of brine draw. The same amount is drawn every time. The voids of the salt do not affect the brine draw.
- **Brine check** in brine valve prevents air draw into mineral tank.
- **Positive pressure** is applied to seat the brine valve to prevent brine contamination during the service cycle.
- **Standard systems** have a fixed brine float which is factory preset at a brine draw which works for the system. Brine draw can be adjustable by adding the optional adjustable brine float.

ACCUMATIC™ BRINE SYSTEM OPERATION

1. The Task Master III™ valve shifts to the brine position. Flow now passes through the brine injector mounted inside the valve body (internal injector). (See part #2 on the exploded view of the Task Master III™.) The injector draws a vacuum on the brine line.
2. This vacuum releases the brine valve seal (originally seated by incoming fill water pressure). The Free-flow valve drops open allowing brine to be drawn from the tank. As water is drawn from the tank, the main float will drop to allow re-fill. At the same time, the vacuum draws the air check valve closed to prevent the drawing of air through the re-fill valve.
3. The unit will continue to draw brine until the water level in the brine tank reaches the bottom of the brine riser tube. At this time the brine check will seat. This again prevents air from being drawn into the system. The Task Master III™ valve remains in brine position and water continues to pass through the injector even though it is not drawing brine. This cycle is called Slow Rinse. Slow rinse ends when the cycle timer advances the piston to the Fast Rinse position.
4. In the Fast Rinse position (and all other positions except Brine Draw) the brine line is under positive pressure. This positive pressure lifts the inverted free-flow valve and the air check valve and allows water to begin refilling the brine tank.
5. Refilling continues until the water level in the brine tank reaches the preset level and the float causes the brine valve seat and seal. The continuing positive pressure on the brine line maintains this seal.
6. The fresh water, which entered the brine tank, is now in contact with solid salt. Over the next few hours, the water becomes saturated with salt creating saturated brine.

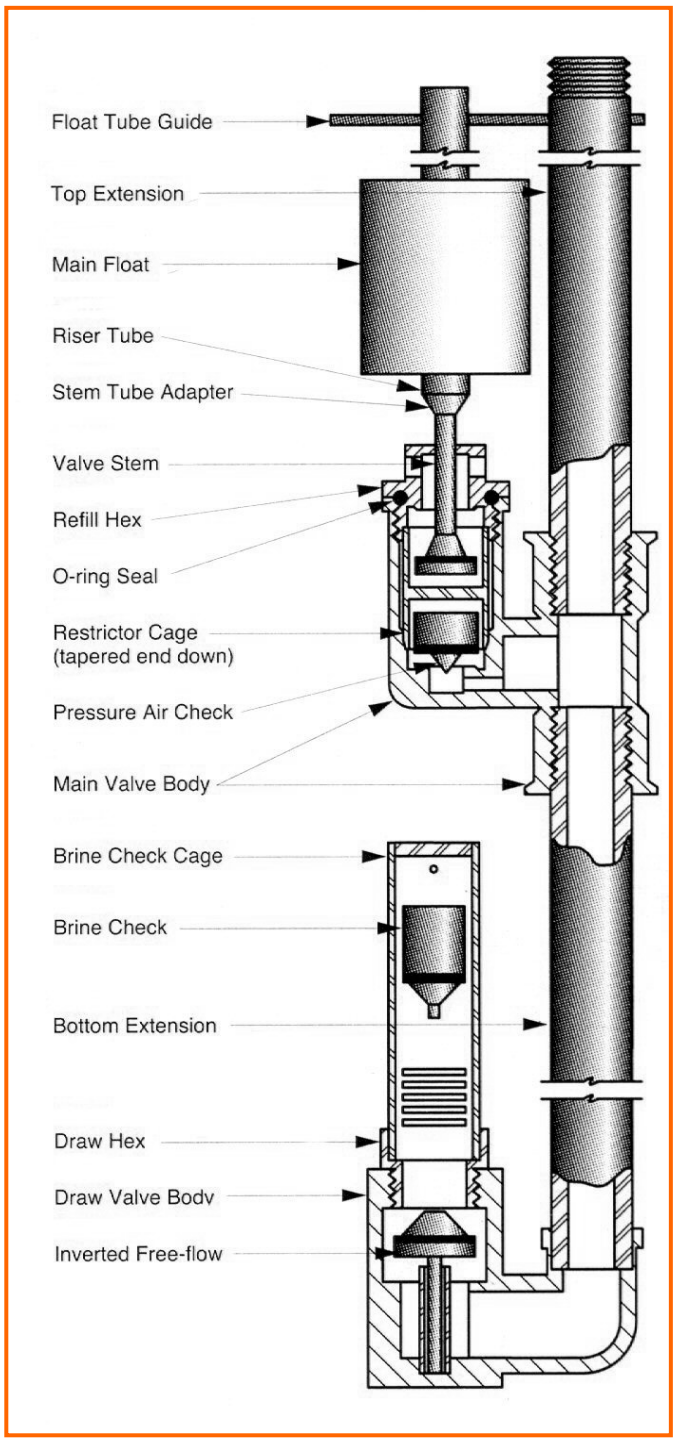

TASK MASTER III™

1 ½ INCH COMMERCIAL INDUSTRIAL WATER SOFTENER AND FILTER VALVE

- The Task Master III™ is a 316 Stainless Steel 1½ inch, five cycle, water softener or water filter control valve.
- There is only one moving part – the piston.
- The valve body is 316 SS and the piston is stainless steel with EPDM seals and inserts.
- The valve has two different tank adaptors allowing top mount on a fiberglass tank or side mount on the face piping.

- The housing for the brine ejector is cast into the valve body making it an integral part of the valve.
- The piston is motor driven and is not dependent on water pressure. It shifts smoothly without water hammer. The drive assembly positions the plunger for each of the five cycles.
- The valve design assures synchronization of the drive assembly with the electronic timer and optical sensors making certain the plunger is correctly positioned for each of the five cycles of softening.
- ERCt 99-day electronic timer with ability to independently program each cycle time.
- ERCd demand regeneration timer with variable reserve.
- The electrical enclosure carries a NEMA 4 rating.
- Since brining and process control often must be coordinated with the regeneration cycles of a softener, the valve is designed to provide an on/off signal and dry contacts for external electrical functions.
- Temperature rating is 180°F. Operating pressure is 125 psi.
- 71 gpm backwash rate (at 25 psi head loss)
- Valve coefficient is 15.
- Top Mount and Side Mount tank adaptors =>

Water King
WATER CONDITIONING

ERCd Controller

NEMA 4 / IP65 Style Enclosure

Intended for indoor or outdoor use primarily to provide a degree of protection against corrosion, windblown dust and rain, splashing water, and hose-directed water; undamaged by the formation of ice on the enclosure. The enclosure door must be kept tightly closed. Any modifications to this product (i.e. added holes for cable entry/mounting, conduit connections...etc.) may void the intended NEMA4/IP65 rating. NEMA 4/IP65 and UL rated fittings should be used when modifying the enclosure.

Variable Reserve Function (VRF)

The ERCd control has a variable reserve function, which automatically adjusts the reserve to the water usage schedule. Each day the ERCd reviews the last four weeks of water usage (demand as measured by the flow meter) for the same day of the week to determine if the remaining capacity is adequate for the next day. If not, it will initiate an automatic regeneration. Default regeneration time is 2:00 am. The VRF does not operate in twin alternating mode.

Backwash Cycle	0-250 minutes
Regenerant Draw Cycle	0-250 minutes
Slow Rinse Cycle	0-250 minutes
Fast Rinse Cycle	0-250 minutes
Reserve Type	Variable Delayed Regeneration, Fixed Delayed Regeneration, Variable Immediate Regeneration, Fixed Immediate Regeneration
K-Factor	0.01-99.99

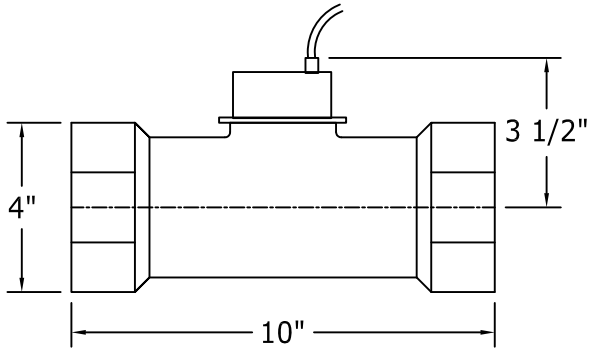

3" FLOW METER
20 – 470 GPM
Cv = 590
K–factor = 7 pulse/gal.

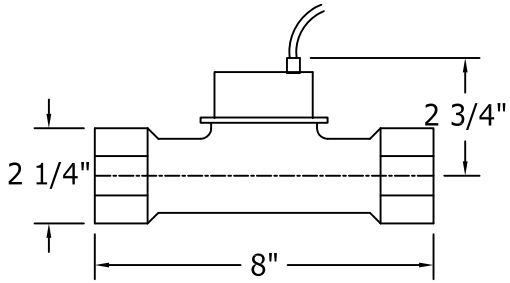

1 1/2" FLOW METER
5 – 140 GPM
Cv = 190 in 1 1/2" Pipe
Cv = 82 in 2" Pipe
Cv = 63 in 2 1/2" Pipe
K–factor = 28 pulse/gal.

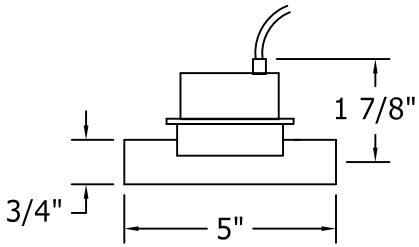

3/4" FLOW METER
1 – 20 GPM
Cv = 16
K–factor = 245 pulse/gal.

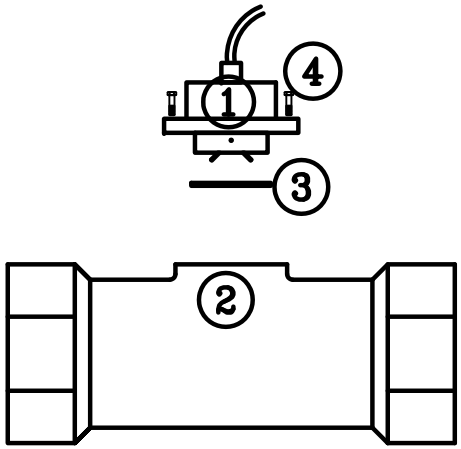

PARTS LIST– WATER KING PW SERIES

	ITEM	3"	1 ½"	¾"
	MODEL	PW300	PW150	PW075
	METER ASSEMBLY	500843	500841	500840
1	PADDLE WHEEL ASSEMBLY *	500850	500850	500850
2	FLOW METER BODY	300863	300861	300860
3	O-RING	400633	400633	400633
4	MOUNTING SCREW (4 REQUIRED)	400334	400334	400334

* WITH 10 Ft. LEAD. FOR 50 Ft. LEAD ORDER 500850-50

FLOW METERS ABOVE HAVE CONNECTION
FOR ERCd CONTROLLER
FOR METERS WITHOUT CONNECTOR
(JUST 3 WIRES) ORDER:
500863 FOR 3" METER
500861 FOR 1-1/2" METER
500860 FOR 3/4" METER

Paddle Wheel Flow Meters

Lit.# 900867

04/02/2013

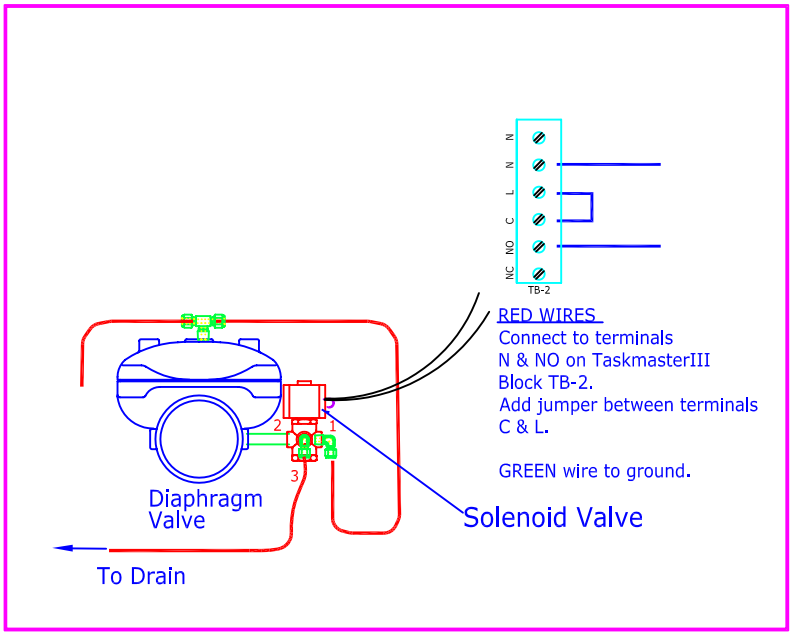

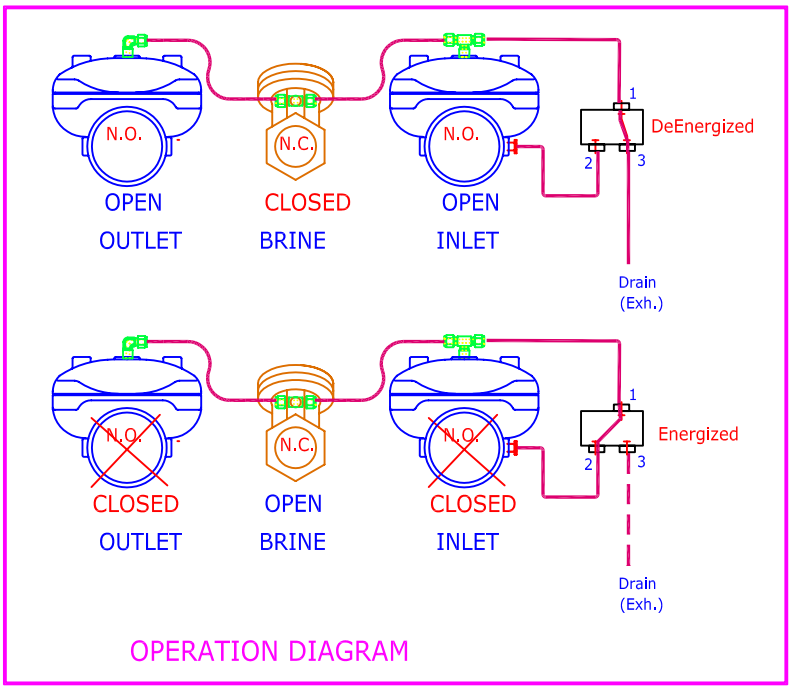

OPERATION DIAGRAM

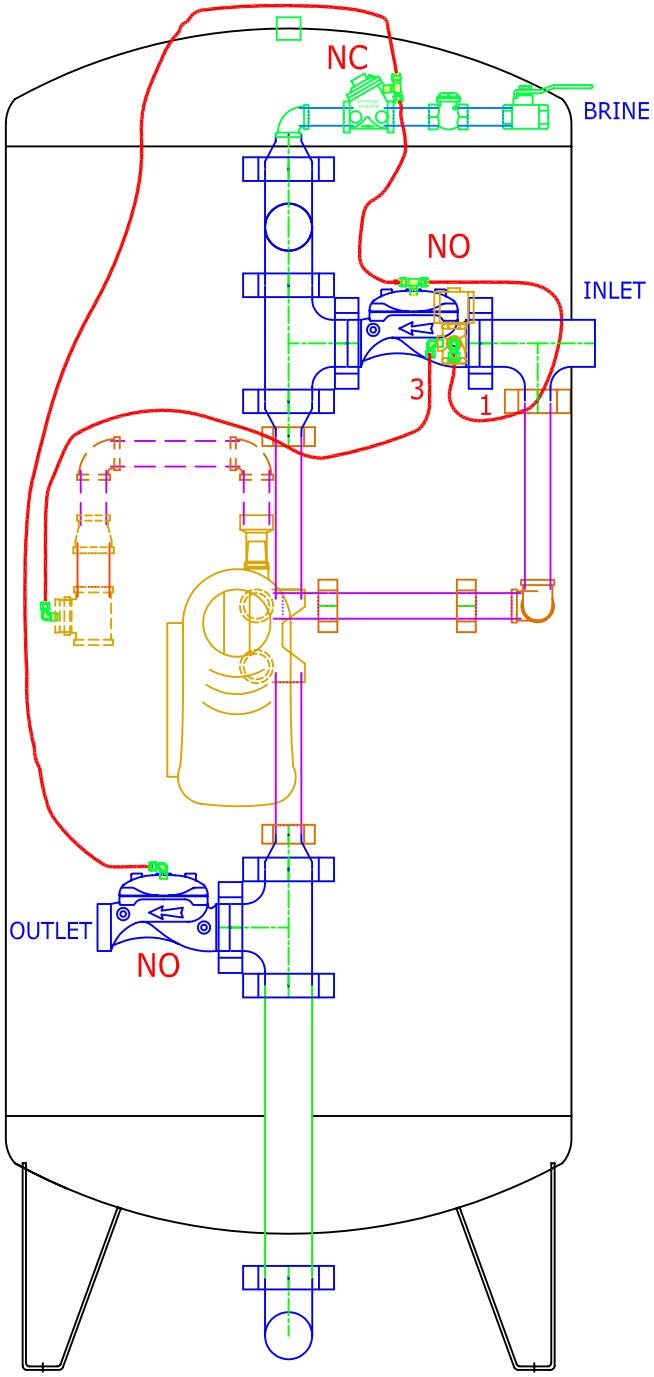

SEE 900975 FOR SOLENOID
INSTALLATION AND WIRING

SUPER FLOW KITS (SFK) for External brine eductor systems
Includes two N.O. Diaphragm Valves, one N.C. Diaphragm valve,
Solenoid Valve, Tubing, and Fittings

Super Flow Kit (DM 200 valves) 2" 720032 -E
Super Flow Kit (DM 300 valves) 3" 720033 -E
Super Flow Kit (DM 400 valves) 4" 720034 -E

A Super Flow Kit provides inlet and outlet bypass valves which are open during service and closed during regeneration.
This allows the MF Task Master III five cycle valve to perform the regeneration functions. During service the valve is bypassed allowing higher flows.
A Super Flow Kit could be called a service flow bypass.

BY:	No.	REVISION	DATE	CK'D
	0	PRELIMINARY	09/25/2009	.
	.	RE-DRAWN	05/18/10	
	.	UP=DATED	01/24/2012	

Water King

LITERATURE # 900975-3E
MF SUPER FLOW KIT
W/EXTERNAL EDUCTOR

SCALE @ 24"x36"	DRAWING NUMBER	SHEET
N.T.S.	900975-3E	01 /0 1

102 Charbonnet Rd., Duson, Louisiana, 70529 U.S.A.
Telephone: (337) 988-2360 * Fax: (337) 981-7922
www.waterking.com

I:\Drawings\Literature\S.O.K\900975-3E - Literature TMIII SFK.dwg, 1/24/2012 12:54:42 PM, Adobe PDF, Letter, 1:14.2572, Water King Inc.

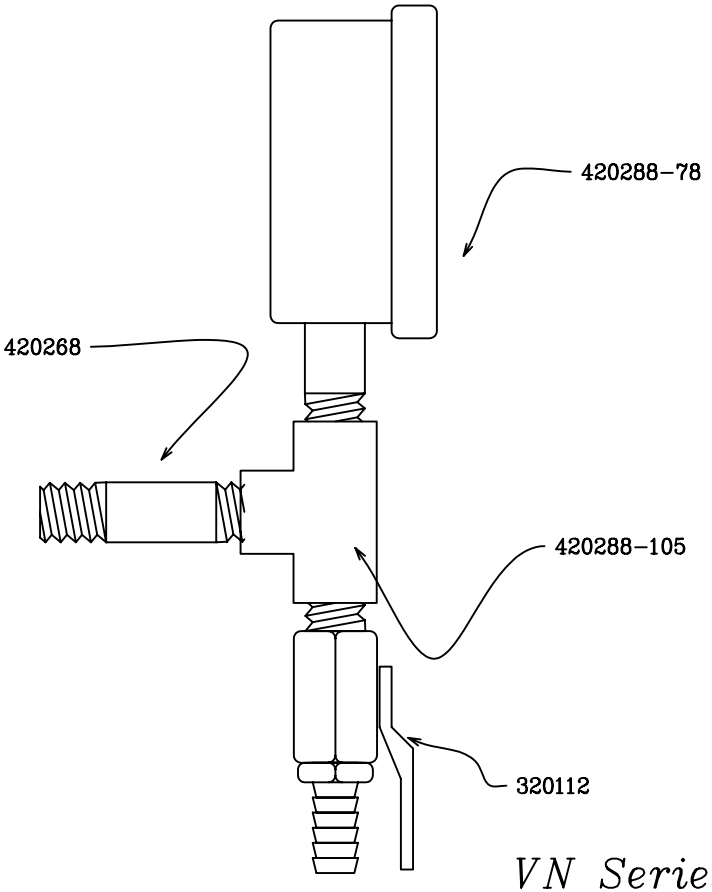

Note:
Two Pressure Gauges are included in each kit. One for inlet and one for Outlet

VN Series-Pressure Gauge & Test Tap Kit # 720075-8 FOR VALVE NEST AND MF-SUPER FLOW SYSTEMS

Specifications:
Pressure gauge and test tap kit;
A kit containing two liquid filled, stainless steel pressure gauges with 2 ½" Ø face, two brass ball valve sample taps with hose barb connections and associated brass connection. Fittings shall be provided for mounting in the $\frac{1}{4}$" FNPT pre drilled and tapped ports in the inlet and outlet of the Task Master valve.

Revised by: 310310JEB

Water King
WATER CONDITIONING
Water King, Inc.
102 Charbonnet Rd., Duson, Louisiana, U.S.A. 70529
Telephone: (337) 988-2360 * Fax: (337) 981-7922
www.waterking.com

LIT.# 900864-3

K:\Drawings\Literature\PG & TTK\900864-3 Literature for 720075-8 VN PGTTK.dwg, 3/31/2010 10:32:27 AM, Adobe PDF, Letter, 1:1.58649, Water King Inc

Fluid Ejectors

EE series brine ejectors are made in sizes from 1/2 inch to 2- inch pipe with standard female NPT threads. Socket weld ends are available upon request. They are constructed of corrosion-resistant PVC material specifically for application in water treatment systems. The ejector cartridge is chemically bonded inside the housing for long, trouble-free life.

Operating Conditions

Maximum Temperature:	140F (60C)
Minimum operating pressure:	20 psi (1.4 bar)
Maximum Operating Pressure:	125 psi (8.6 bar).

- Optimal Performance
- Economical
- Durable
- Corrosion Resistant

Water King
WATER CONDITIONING